ARMSTRONG
FLOW CONTROL

Valves

BF3S10SPBN

Ball valve, 3-piece full bore design, suitable for air, gas, water and low pressure steam,

- **Body, ball & stem: 316 stainless steel**
- **Seats: RPTFE**
- **End Connections: Screwed BSP or socket weld**
- **Maximum pressure rating: 7,000 kpa (1,000 psi)**
- **Maximum temperature rating: 204 degrees C**
- **Sizes: 8mm to 50mm**

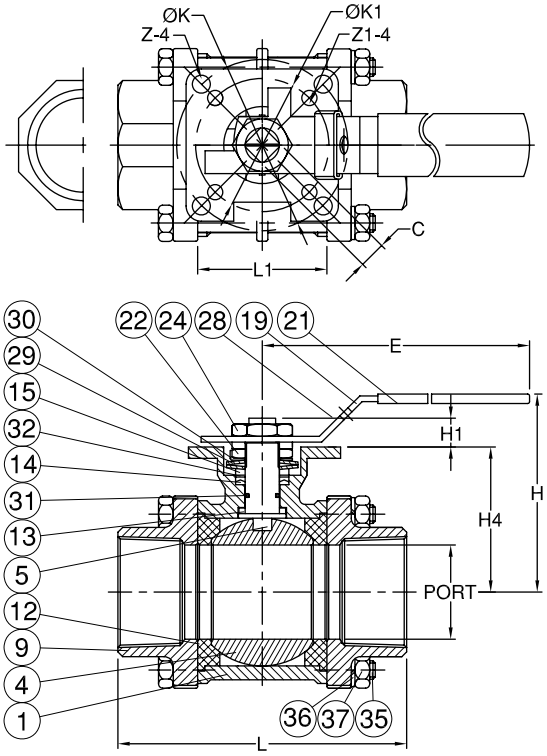

WORKING PRESSURE: 1/4"~2" 1000PSI
2-1/2"~4" 800PSI

MATERIALS LIST

NO.	PART NAME	MATERIAL
1	BODY	ASTM A351 Gr.CF8M
4	BALL	ASTM A351 Gr.CF8M
5	STEM	SS316
9	END CAP	ASTM A351 Gr.CF8M
12	SEAT	RTFE.
13	THRUST WASHER	RTFE.
14	STEM PACKING	RTFE.
15	GLAND BUSH	SS304
19	HANDLE	SS304
21	HANDLE COVER	VINYL GRIP
22	STEM NUT	SS304
24	HANDLE NUT	SS304
28	LOCKING PAD	SS304
29	BELLEVILLE WASHER	SS304-CSP
30	TAB WASHER	SS304
31	O-RING	VITON
32	PACKING FOLLWER	PTFE.+25%G.F.
35	BODY BOLT	SS304
36	BOLT WASHER	SS304
37	BOLT NUT	SS304

DIMENSIONS

unit:mm

SIZE		PORT	L	E	H	H1	H4	C	ØK	ØK1	Z-4	Z1-4	L1
DN8	1/4"	11.5	63.5	112.0	73.0	8.5	37.0	9.0	50.0	36.0	7.0	6.0	22.5
DN10	3/8"	12.5	63.5	112.0	73.0	8.5	37.0	9.0	50.0	36.0	7.0	6.0	22.5
DN15	1/2"	15.0	63.5	112.0	73.0	8.5	37.0	9.0	50.0	36.0	7.0	6.0	22.5
DN20	3/4"	20.0	72.5	112.0	80.8	8.5	45.0	9.0	50.0	36.0	7.0	6.0	27.5
DN25	1"	25.0	81.0	136.0	90.5	11.4	53.5	9.0	50.0	36.0	7.0	6.0	34.0
DN32	1-1/4"	32.0	94.5	185.0	98.7	11.4	59.0	9.0	50.0	36.0	7.0	6.0	42.5
DN40	1-1/2"	38.0	108.0	197.9	115.3	14.0	74.8	14.0	70.0	50.0	9.0	7.0	52.0
DN50	2"	50.0	121.5	197.9	124.0	13.7	83.5	14.0	70.0	50.0	9.0	7.0	63.5
DN65	2-1/2"	65.0	157.5	267.0	155.0	18.0	108.8	17.0	102.0	70.0	11.0	9.0	85.5
DN80	3"	80.0	190.0	267.0	208.5	18.0	118.3	17.0	102.0	70.0	11.0	9.0	102.0
DN100	4"	100.0	225.0	322.0	216.7	18.0	153.8	17.0	102.0	70.0	11.0	9.0	128.5

BF3S10S50BN

Ball valve, 3-piece full bore design, suitable for steam, water, air, gas and many chemicals.

- **Body, ball & stem: 316 stainless steel**
- **Seats: graphite impregnated PTFE**
- **End Connections: Screwed BSP or socket weld**
- **Direct mount ISO mounting pad suitable for mounting**
- **of pneumatic or electric actuators.**
- **Spring return ("dead man") man handle also available**
- **Maximum pressure rating 7,000 kpa (1,000 psi)**
- **Maximum temperature rating 230 degrees C**
- **Sizes: 8mm to 50mm**

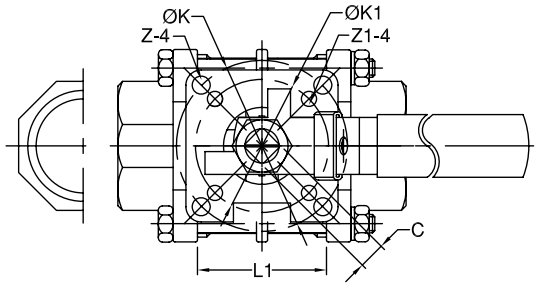

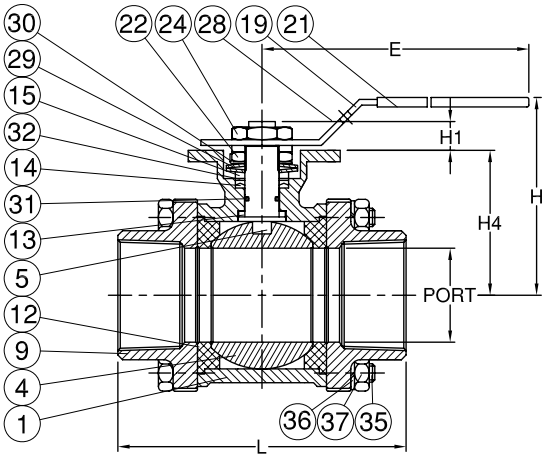

WORKING PRESSURE: 1/4"~2" 1000PSI
2-1/2"~4" 800PSI

MATERIALS LIST

NO.	PART NAME	MATERIAL
1	BODY	ASTM A351 Gr.CF8M
4	BALL	ASTM A351 Gr.CF8M
5	STEM	SS316
9	END CAP	ASTM A351 Gr.CF8M
12	SEAT	50% S.S. Filled PTFE
13	THRUST WASHER	RTFE.
14	STEM PACKING	RTFE.
15	GLAND BUSH	SS304
19	HANDLE	SS304
21	HANDLE COVER	VINYL GRIP
22	STEM NUT	SS304
24	HANDLE NUT	SS304
28	LOCKING PAD	SS304
29	BELLEVILLE WASHER	SS304-CSP
30	TAB WASHER	SS304
31	O-RING	VITON
32	PACKING FOLLWER	PTFE.+25%G.F.
35	BODY BOLT	SS304
36	BOLT WASHER	SS304
37	BOLT NUT	SS304

DIMENSIONS

unit:mm

SIZE		PORT	L	E	H	H1	H4	C	ØK	ØK1	Z-4	Z1-4	L1
DN8	1/4"	11.5	63.5	112.0	73.0	8.5	37.0	9.0	50.0	36.0	7.0	6.0	22.5
DN10	3/8"	12.5	63.5	112.0	73.0	8.5	37.0	9.0	50.0	36.0	7.0	6.0	22.5
DN15	1/2"	15.0	63.5	112.0	73.0	8.5	37.0	9.0	50.0	36.0	7.0	6.0	22.5
DN20	3/4"	20.0	72.5	112.0	80.8	8.5	45.0	9.0	50.0	36.0	7.0	6.0	27.5
DN25	1"	25.0	81.0	136.0	90.5	11.4	53.5	11.0	50.0	36.0	7.0	6.0	34.0
DN32	1-1/4"	32.0	94.5	185.0	98.7	11.4	59.0	11.0	50.0	36.0	7.0	6.0	42.5
DN40	1-1/2"	38.0	108.0	197.9	115.3	14.0	74.8	14.0	70.0	50.0	9.0	7.0	52.0
DN50	2"	50.0	121.5	197.9	124.0	13.7	83.5	14.0	70.0	50.0	9.0	7.0	63.5
DN65	2-1/2"	65.0	157.5	267.0	155.0	18.0	108.8	17.0	102.0	70.0	11.0	9.0	85.5
DN80	3"	80.0	190.0	267.0	208.5	18.0	118.3	17.0	102.0	70.0	11.0	9.0	102.0
DN100	4"	100.0	225.0	322.0	216.7	18.0	153.8	17.0	102.0	70.0	11.0	9.0	128.5

BF3S20SRN(B)F

Ball valve, 3-piece full bore design, firesafe and antistatic
To API 607, BS5146, suitable for flammable fluid and gases,
Water, air, gas and many chemicals.

- **Body, ball & stem: 316 stainless steel**
- **Seats: RPTFE**
- **Body seals and gland packing: Graphite**
- **End Connections: Screwed BSP, NPT or socket weld**
- **Spring return ("dead man") man handle also available**
- **Maximum pressure rating 14,000 kpa (2,000 psi)**
- **Maximum temperature rating 204 degrees C**
- **Sizes: 8mm to 50mm**

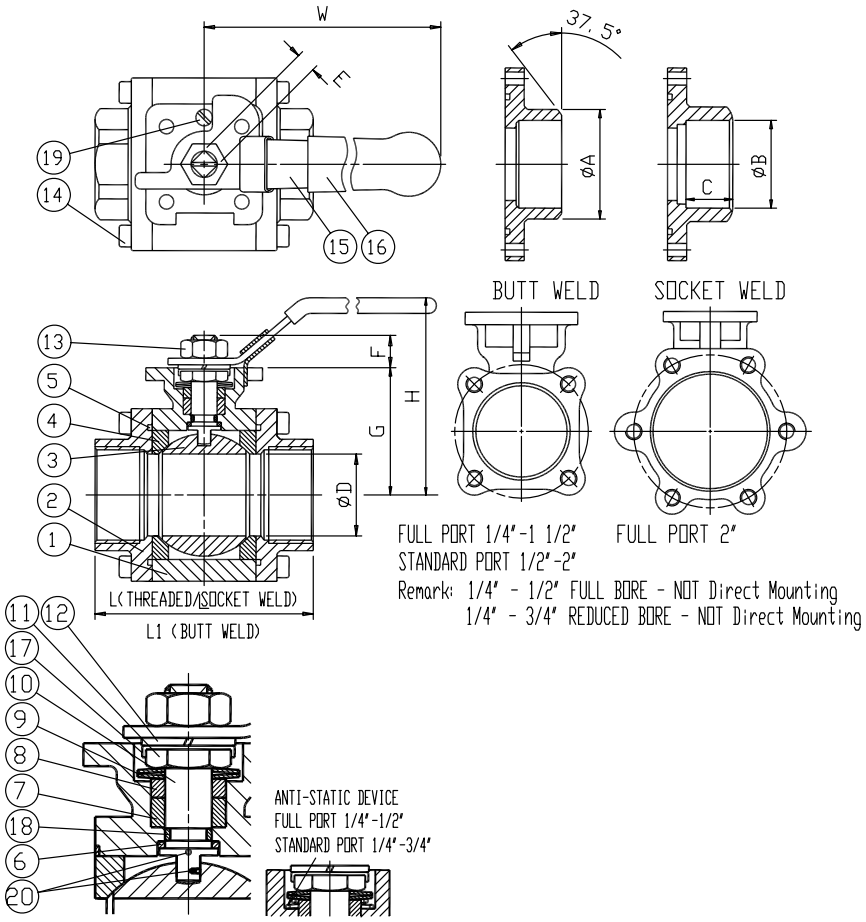

AF-35 SIZE: 1/4"-2" FIRE-SAFE API 607

3-PIECE FULL PORT and STANDARD PORT BALL VALVE
SCREWED ENDS, BUTT WELDED END, SOCKET WELDED END
ISO 5211 MOUNTING PAD
DIN 3202-M3 (SCREWED ENDS/SOCKET WELDED ENDS)
-S13 (BUTT WELDED ENDS)
PRESSURE: 2000 PSI(CLASS 800)W.O.G.
STAINLESS STEEL: 316 BODY, with 316 SS TRIM
CARBON STEEL: WCB BODY, with 316 SS TRIM
Remark: 1/4" - 1/2" FULL BORE - NOT Direct Mounting
1/4" - 3/4" REDUCED BORE - NOT Direct Mounting

STANDARDS APPLICABLE

ASME B16.34-STEEL VALVES FLANGED,THREADED,AND WELDING END
ASME B1.20.1-PIPE THREADS,GENERAL PURPOSE
ASME B16.10-FACE TO FACE&END TO END DIMENSIONS OF VALVES
API 598-VALVE INSPECTION AND TESTING
MSS SP72-BALL VALVES WITH FLANGED OR BUTT WELDING ENDS FOR GENERAL SERVICES
MSS SP25-STANDARD MARKING SYSTEM FOR VALVES FITTINGS, FLANGES AND UNIONS

ITEM	DESCRIPTION	STAINLESS STEEL	CARBON STEEL	Q'TY
1	BODY	ASTM A351 CF8M	ASTM A216 WCB	1
2	END CAP	ASTM A351 CF8M	ASTM A216 WCB	2
3	BALL	ASTM A351 CF8M/316	ASTM A351 CF8M/316/304	1
4	SEAT	RPTFE		2
5-1	GASKET	GRAPHITE		2
5-2		PTFE		2
6-1	THRUST WASHER	GRAPHITE		1
6-2		PTFE		1
7	STEM PACKING	GRAPHITE		1
8	GLAND	AISI 304		1
9	BELLEVILLE WASHER	AISI 301		2
10	STEM	ASTM A276 316		1
11	PACKING NUT	AISI 304		1
12	SPRING WASHER	AISI 304		1
13	HANDLE NUT	AISI 304		1
14	BOLT	ASTM A193 B8	ASTM A193 B7	8-12
15	HANDLE	AISI 304	ZINC PLATED STEEL	1
16	HANDLE GRIP	VINIL PLASTISOL		1
17	LOCK SADDLE	AISI 304		1
18	O-RING	VITON		1
19	STOPPOER NUT	AISI 304	CARBON STEEL	1
20	ANTI-STATIC DEVICE	AISI 304		1-2

SIZE		ØD		L		L1		E		F		G		H		W		ØA		ØB		C		ISO 5211 (F)	Weights KG
IN	DN	IN	MM	IN	MM	IN	MM	IN	MM	IN	MM	IN	MM	IN	MM	IN	MM	IN	MM	IN	MM	IN	MM		
1/4"	8	0.43	11.0	2.55	65.0	2.75	70.0	0.35	9.0	0.31	8.0	1.47	37.5	2.75	70.0	5.51	140.0	0.54	13.8	0.56	14.2	0.39	10.0	F04	1.1
3/8"	10																	0.68	17.3	0.69	17.6				1.1
1/2"	15	0.55	14.0	2.95	75.0	2.95	75.0											0.85	21.7	0.86	21.8	0.51	13.0		1.1
3/4"	20	0.80	20.5	3.14	80.0	3.54	90.0	0.43	11.0	0.43	11.0	1.96	52.0	3.54	90.0	7.08	180.0	1.07	27.2	1.07	27.2	0.59	15.0	F04-F05	1.6
1"	25	0.98	25.0	3.54	90.0	3.93	100.0					2.36	60.0	3.93	100.0			1.34	34.0	1.33	33.9				2.2
1 1/4"	32	1.24	31.5	4.33	110.0	4.33	110.0	0.55	14.0	0.67	17.0	2.83	72.0	4.40	112.0	8.46	215.0	1.68	42.7	1.68	42.7	0.63	16.0	F07	3.3
1 1/2"	40	1.45	37.0	4.72	120.0	4.92	125.0					2.99	76.0	4.52	115.0			1.91	48.6	1.92	48.8				4.6
2"	50	1.96	50.0	5.51	140.0	5.90	150.0					3.66	93.0	5.23	133.0			2.38	60.5	2.41	61.2	0.67	17.0		7.3

BF2C15SRRF / BF2C15SXRF

Ball valve, 2-piece, split body, full bore design, firesafe and Antistatic to API 607, BS5146, suitable for flammable fluid and gases, Water, air, gas and non corrosive chemicals.

- **Body: Carbon Steel ASTM A 216 Gr WCB**
- **Ball & stem: 316 stainless steel**
- **Seats: RPTFE, TFM 1600 High Temp**
- **Body seals and gland packing: Graphite**
- **End Connections: Flanged ANSI 150 RF**
- **Maximum pressure rating 1,950 kpa**
- **Maximum temperature rating 204 degrees C**
- **Sizes: 15mm to 150mm**

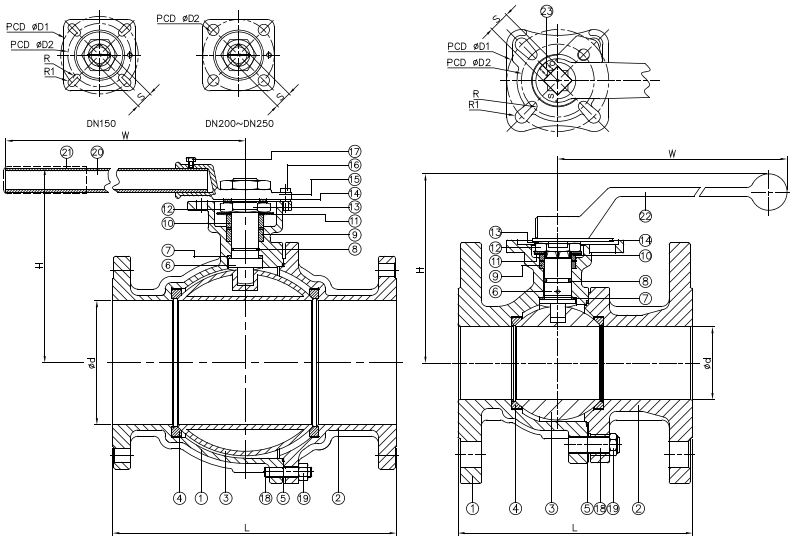

DN200~DN250 DN15~DN100

ITEM	PARTS	MATERIAL	
1	BODY	ASTM A351-CF8M	ASTM A216-WCB
2	CAP		
3	BALL	SOLID: ASTM A351-CF8M / HOLLOW: ASTM A240-316	
4	SEAT	TFM1600 / RTFE	
5	SEAL	GRAPHITE	
6	STEM	ASTM A276-316	
7	THRUST WASHER	CTFE	
8	O-RING	VITON	
9	PACKING	GRAPHITE	
10	GLAND RING	AISI 304	
11	BELLEVILLE WASHER	AISI 301	
12	STEM NUT	AISI 304	
13	LOCKING WASHER		
14	FLAT WASHER		
15	HANDLE HEAD		
16	STOP PIN		
17	BOLT		
18	STUD		
19	NUT		
20	STEEL TUBE		
21	HANDLE SLEEVE	PVC	
22	HANDLE	AISI 301	
23	SOCKET SET SCREW		

- ABOVE MENTIONED MATERIALS APPLY TO FIRE SAFE DESIGN
- ISO 15848 DESIGN SHOULD REPLACE WITH PTFE SEAL & PACKING

DN	d	CLASS 150			CLASS 300			D1	D2	R	R1	S	Torque(N-M)
		L	H	W	L	H	W						
15	15	108	85	190	140	84.5	197.5	42	36	2.75	2.75	9	5.2
20	20	117	89.5	190	152	94.5	197.5	42	36	2.75	2.75	9	8
25	24	127.5	94.2	190	165	99.5	197.5	50	42	2.75	3.5	11	12.5
32	30	140.5	97.9	190	178	105	197.5	50	42	2.75	3.5	11	12
40	38	165	120.9	235	190	124.5	247.5	70	50	3.5	4.5	14	24.5
50	50	178	129.9	235	216	129	247.5	70	50	3.5	4.5	14	32
65	64	190.5	156.3	325	241	154.5	340	102	70	4.5	5.5	17	38
80	76	203	163.3	325	282	165.5	340	102	70	4.5	5.5	17	45
100	98	229	190.9	325	305	188	340	125	102	5.5	6.5	22	55
125	125	356	232	743	-	-	-	125	102	5.5	6.5	27	160
150	150	394	230	743	403	253	743	125	102	5.5	6.5	27	250
200	200	457	312	840	-	-	-	-	140	8.5	-	36	470
250	250	533	350	1040	-	-	-	-	140	8.5	-	36	750

unit:mm

BF2S15SRRF / BF2S15SXRF

Ball valve, 2-piece, split body, full bore design, firesafe and Antistatic to API 607, BS5146, suitable for flammable fluid and gases, Water, air, gas and many chemicals.

- **Body: 316 Stainless Steel ASTM A351 CF8M**
- **Ball & stem: 316 stainless steel**
- **Seats: RPTFE, TFM 1600 High Temp**
- **Body seals and gland packing: Graphite**
- **End Connections: Flanged ANSI 150 RF**
- **Maximum pressure rating 1,950 kpa**
- **Maximum temperature rating 260 degrees C**

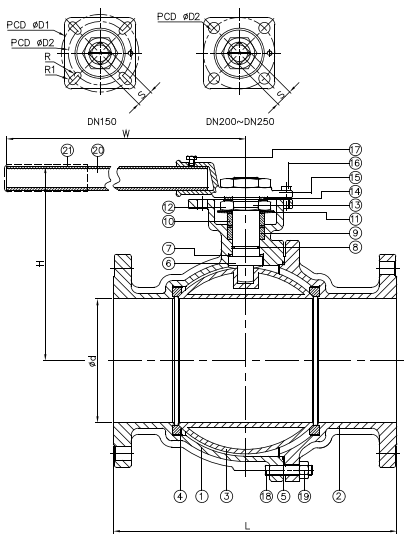

DN200~DN250

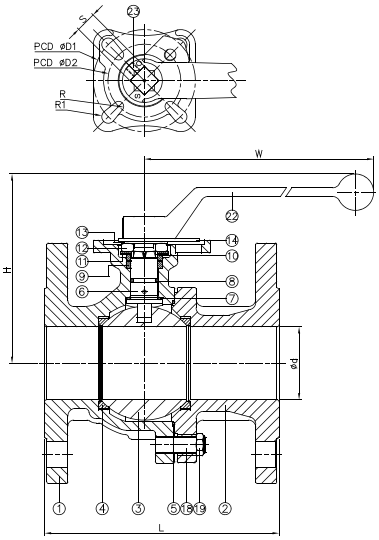

DN15~DN100

ITEM	PARTS	MATERIAL	
1	BODY	ASTM A351-CF8M	ASTM A216-WCB
2	CAP		
3	BALL	SOLID: ASTM A351-CF8M / HOLLOW: ASTM A240-316	
4	SEAT	TFM1600 / RTFE	
5	SEAL	GRAPHITE	
6	STEM	ASTM A276-316	
7	THRUST WASHER	CTFE	
8	O-RING	VITON	
9	PACKING	GRAPHITE	
10	GLAND RING	AISI 304	
11	BELLEVILLE WASHER	AISI 301	
12	STEM NUT	AISI 304	
13	LOCKING WASHER		
14	FLAT WASHER		
15	HANDLE HEAD		
16	STOP PIN		
17	BOLT		
18	STUD		
19	NUT		
20	STEEL TUBE		
21	HANDLE SLEEVE	PVC	
22	HANDLE	AISI 301	
23	SOCKET SET SCREW		

- ABOVE MENTIONED MATERIALS APPLY TO FIRE SAFE DESIGN
- ISO 15848 DESIGN SHOULD REPLACE WITH PTFE SEAL & PACKING

DN	d	CLASS 150			CLASS 300			D1	D2	R	R1	S	Torque(N-M)
		L	H	W	L	H	W						
15	15	108	85	190	140	84.5	197.5	42	36	2.75	2.75	9	5.2
20	20	117	89.5	190	152	94.5	197.5	42	36	2.75	2.75	9	8
25	24	127.5	94.2	190	165	99.5	197.5	50	42	2.75	3.5	11	12.5
32	30	140.5	97.9	190	178	105	197.5	50	42	2.75	3.5	11	12
40	38	165	120.9	235	190	124.5	247.5	70	50	3.5	4.5	14	24.5
50	50	178	129.9	235	216	129	247.5	70	50	3.5	4.5	14	32
65	64	190.5	156.3	325	241	154.5	340	102	70	4.5	5.5	17	38
80	76	203	163.3	325	282	165.5	340	102	70	4.5	5.5	17	45
100	98	229	190.9	325	305	188	340	125	102	5.5	6.5	22	55
125	125	356	232	743	-	-	-	125	102	5.5	6.5	27	160
150	150	394	230	743	403	253	743	125	102	5.5	6.5	27	250
200	200	457	312	840	-	-	-	-	140	8.5	-	36	470
250	250	533	350	1040	-	-	-	-	140	8.5	-	36	750

unit:mm

VALVE SEAT MATERIAL SELECTION GUIDE

Material	Description	Color
PTFE	The material is the basic seat material used in most ball valves. Its chemical compatibility is excellent for almost all media service applications.	White
RTFE	15% Glass Reinforced TFE. This material is offered as the standard seal in most HAITIMA valves. Chemical resistance is compatible to virgin TFE with improved cycle life and greater pressure-temperature rating than PTFE.	Off white
CTFE	25% Carbon with 75% TFE. This material offers a wide temperature range with better cycle life than RTFE.	Black
TFM	TFM is chemically modified PTFE that fills the gap between conventional PTFE and melt-processable PFA. According to ASTM D 4894 and ISO Draft WDT 539-1.5, TFM is classified as a PTFE. Compared to conventional PTFE, TFM has lower permeability and much lower deformation under pressure (cold flow) at room and elevated temperature. Also they can be used at higher pressures.	White
PEEK	Polyether-ether-ketone-high temperature semirigid elastomer. Best suited for high pressure and temperature service. Also offers very good corrosion resistance.	Grey
DELRIN	Delrin is capable of handling extremely high pressure. Must not used for oxygen service.	Creamy white
Cavity Filler	Designed to reduce the possibility of contamination by entrapment of process fluids in the void normally found behind the ball and the valve body in conventionally designed ball valves. Ideal for application where cross contamination is a concern, such as paints and dyes.	White

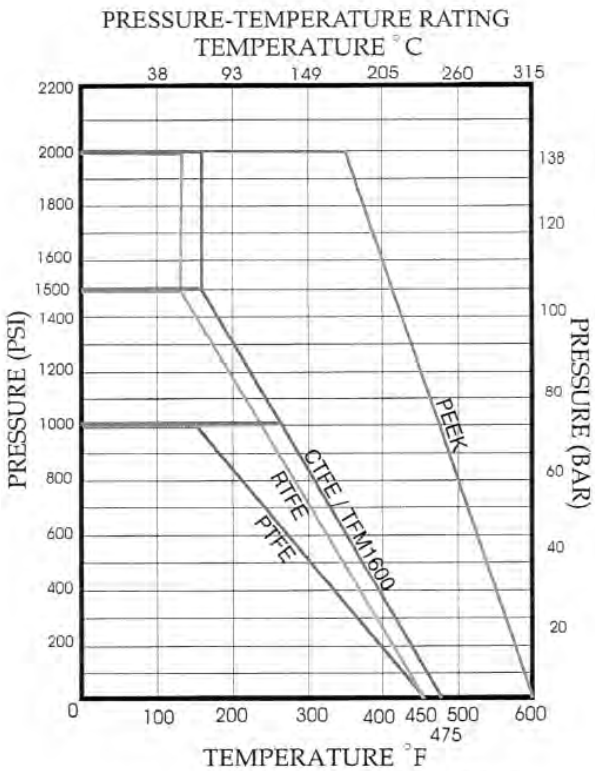

800/1000/1500/2000 WOG

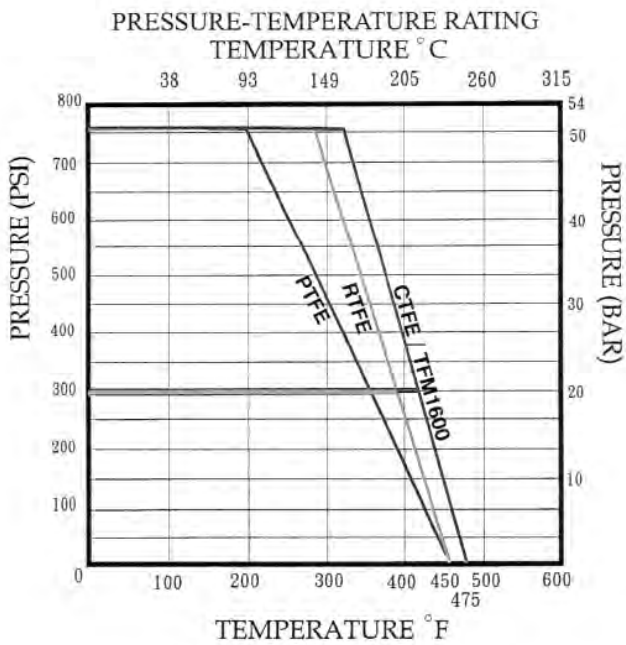

CLASS 150/300

Description

Exclusively designed Armstrong bellows sealed globe valve has a sealing combination featured by using double walls stainless steel bellows as the stem seal elements and graphite packing as seal accessory to prevent leakage. The finely polished planar sealing between the valve and the seat ensures a long-term reliable operation whenever the stem is moving or not. Therefore, it can display remarkable sealing characteristics at any applications.

Armstrong bellows sealed globe valves can be widely applied in the water, steam, oil and other non-corrosion systems in petrochemical, electricity, metallurgy, electronics, textile and other industries.

Connections

Screwed (NPT/BSPT), socket weld, flanged (HG20592 RF, other flanges available, please consult factory).

Bellows Sealed Globe Valves

Model	Body Material	Norm. Pressure (MPa)	Size	Connection Type
BD16	Ductile Iron	1.6	DN15～DN300	Flanged
BD25	Ductile Iron	2.5		
BCS16	Carbon Steel	1.6	DN15～DN50	Flanged
BCS25	Carbon Steel	2.5		
BCS40	Carbon Steel	4.0	DN15～DN50	Screwed, SW
			DN15～DN300	Flanged

Design Features

Model	BD16	BD25	BCS16	BCS25	BCS40
Max. Allowable Pressure	2.5MPa@ 20℃	4.0MPa@ 20℃	2.5MPa@ 20℃	4.0MPa@ 20℃	6.4MPa @20℃
Max. Operating Pressure	1.6MPa	2.5MPa	1.6MPa	2.5MPa	4.0MPa
Max. Allowable Temperature	350℃	350℃	350℃	350℃	350℃
Min. Operating Temperature	-10℃	-10℃	-30℃	-30℃	-30℃

Pressure-Temperature Ratings

Model	≤120℃	150℃	200℃	250℃	300℃	350℃
BD16	1.6MPa	1.52MPa	1.44MPa	1.28MPa	1.12MPa	0.88MPa
BD25	2.5MPa	2.43MPa	2.25MPa	2.18MPa	2.00MPa	1.75MPa
BCS16	1.6MPa	1.57MPa	1.52MPa	1.44MPa	1.28MPa	1.12MPa
BCS25	2.5MPa	2.45MPa	2.38MPa	2.25MPa	2.00MPa	1.75MPa
BCS40	4.0MPa	3.92MPa	3.80MPa	3.60MPa	3.20MPa	2.80MPa

- **Long-term Operation**
  Its compact yet rugged construction and anti-twist device on the bellows offers long, corrosion resistant service.

- **Double bellows sealing**
  It combines double walls stainless steel bellows seal with graphite packing seal.

- **Planar sealing**
  The planar sealing between the valve and the seat ensures reliable sealing and operation.

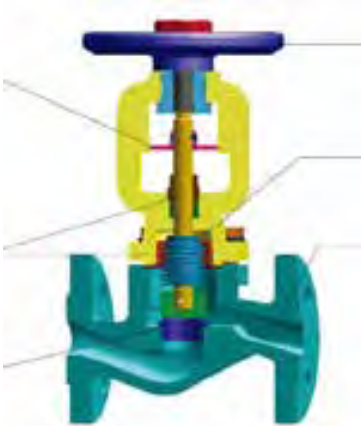

- **Easy to Operate**
  Non-rising handwheel travels less and makes responses quicker; free opening/closing in narrow space; on/off position indicator makes operation easier.

- **Maintenance-free**
  Being the key component, double wall bellows seal keeps you free from valve leakage and maintenance.

- **Wide Applications**
  It can be widely used under different pressures, temperatures or vibrating conditions, which makes it ideal for many applications.

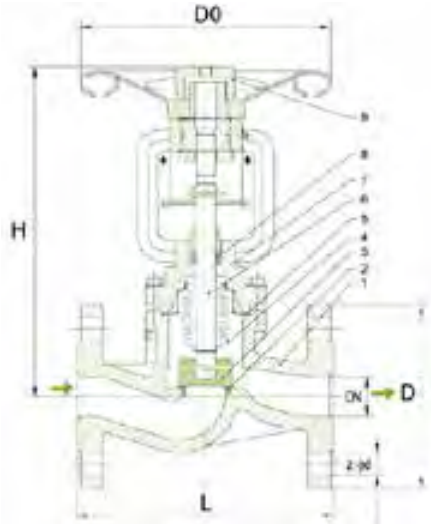

Fig. 1 Bellows Sealed Globe Valve (Flanged)

Globe Valve Physical Data (mm)						
Model	**DN**	**D0 (φ)**	**D (φ)**	**H**	**L**	**z-φd**
Ductile Iron BD16/BD25	15	125	95	200	130	4-φ14
	20	125	105	200	150	4-φ14
	25	125	115	210	160	4-φ14
	32	150	140	220	180	4-φ18
	40	150	150	235	200	4-φ18
	50	150	165	235	230	4-φ18
	65	250	185	350	290	4-φ18/8-φ18
	80	250	200	360	310	8-φ18
	100	300	220/235	390	350	8-φ18/8-φ22
	125	300	250/270	500	400	8-φ18/8-φ26
	150	420	285/300	530	480	8-φ22/8-φ26
	200	420	340/360	590	600	12-φ22/12-φ26
	250	520	405/425	765	650	12-φ26/12-φ30
	300	520	460/485	810	750	12-φ26/16-φ30
Carbon Steel BCS16/BCS25/BCS40	15	125	95	200	130	4-φ14
	20	125	105	205	150	4-φ14
	25	125	115	215	160	4-φ14
	32	150	140	235	180	4-φ18
	40	150	150	235	200	4-φ18
	50	150	165	235	230	4-φ18
Carbon Steel BCS40	65	250	185	355	290	8-φ18
	80	250	200	360	310	8-φ18
	100	300	235	390	350	8-φ22
	125	300	270	465	400	8-φ26
	150	425	300	505	480	8-φ26
	200	425	375	600	600	12-φ30
	250	520	450	780	740	12-φ33
	300	520	515	805	850	16-φ33

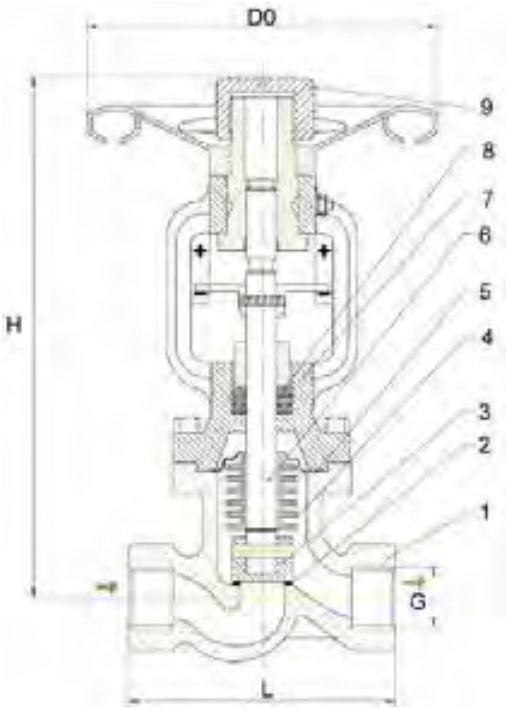

Fig. 2 Bellows Sealed Globe Valve (Screwed)

Globe Valve Physical Data for Screwed Connections (mm)					
Model	**DN**	**D0 (φ)**	**H**	**L**	**G**
Carbon Steel BCS40	15	Φ100	180	90	1/2”
	20	Φ100	180	100	3/4”
	25	φ100	192	120	1”
	32	φ120	212	140	1-1/4”
	40	φ120	220	170	1-1/2”
	50	φ120	235	200	2”

List of Materials			
Part No.	**Part Name**	**BD16/BD25**	**BCS16/BCS25/BCS40**
1	Body	ASTM A395 Ductile Iron	ASTM A216 WCB Cast Steel
2	Seat	Stainless Steel	Stainless Steel
3	Valve	Stainless Steel	Stainless Steel
4	Bellows	304 Stainless Steel	304 Stainless Steel
5	Gasket	Stainless Steel+Expanded Graphite	Stainless Steel+Expanded Graphite
6	Stem	420 Stainless Steel	420 Stainless Steel
7	Cap	ASTM A395 Ductile Iron	ASTM A216 WCB Cast Steel
8	Gland Packing	Expanded Graphite	Expanded Graphite
9	Handwheel	Carbon Steel	Carbon Steel

Performance Parameters															
Name of Parameter	Size / Model	DN 15	DN 20	DN 25	DN 32	DN 40	DN 50	DN 65	DN 80	DN 100	DN 125	DN 150	DN 200	DN 250	DN 300
Flow Coefficient (Kv)	BD16/BD25	5	11	14	20	33	52	74	118	200	285	400	720	1130	1590
	BCS16/BCS25/BCS40	5	11	14	20	33	52	74	118	200	285	400	720	-	-
Valve Stem Stroke (mm)	BD16/BD25	8	10	12	14	15	18	25	28	35	45	58	65	80	94
	BCS16/BCS25/BCS40	8	10	12	14	15	18	25	28	35	45	58	65	-	-
Weight (kg)	BD16	4.5	5	6	9	10	14	23	29	33	71	113	170	275	383
	BD25	4.5	5	6	9	10	14	26	32	38	75	118	176	290	400
	BCS16/ BCS25	4.5	5	6	9	10	14	-	-	-	-	-	-	-	-
	BCS40	6	7	9	12	17	24	33	44	60	89	98	190	318	433
	BCS40(Screwed)	1.5	2	3	5	7	8	-	-	-	-	-	-	-	-

Lift Type Worm Drive Device

The worm drive device featuring high reduction ratio is able to transmit power and perform steadily. It can be widely installed on large sized globe valves serving as valve opening assisting device.

BA series worm drives are optional. See the following table for details.

Worm Drive Device Dimensions and Weights (mm)							
Model	Worm Drive Model	Globe Valve Size	A (φ)	B	C	D (φ)	Weight (kg) *
BD16	BA-1	DN150	460	680	960	285	167
		DN200	460	740	1000	340	224
		DN250	460	765	1260	405	329
	BA-2	DN300	460	857	1330	460	437
BD25	BA-1	DN150	460	680	960	300	167
		DN200	460	740	1000	360	224
		DN250	460	765	1260	425	329
	BA-2	DN300	460	857	1330	485	437
BCS40	BA-1	DN150	460	680	1095	425	152
		DN200	460	740	1170	425	234

Note: The weight consists of the weight of globe valve and the worm drive device.

Please indicate when ordering

- Model
- Max. Operating Pressure
- Max. Temperature
- Nom. Pressure
- Connection Type
- Options

All dimensions and weights are approximate. Use certified print for exact dimensions. Design and materials are subject to change without notice.

BL301NV

Butterfly valve, wafer design.

Suitable for hot water, air, gas and many chemicals

- **Body: Cast Iron**
- **Disc: 316 Stainless steel**
- **Seat: Viton**
- **End Connections: wafer design to suit ANSI 150, AS2129 Table E / D**
- **Maximum pressure rating 1,000 kpa**
- **Maximum temperature rating 220 degrees C**
- **Sizes: 50mm to 200mm**

D I M E N S I O N S — UNIT: mm

NOMINAL DIAMETER	ød	L	FLANGE øC	FLANGE n−øh	H1	H2	B	W	WEIGHT (KG)
40(1.5")	40	33			60	155	205	27	2.2
50(2")	50	43			61	158	205	28	2.7
65(2.5')	67	46			73	169	205	51	3.4
80(3")	79	46			80	180	205	67	3.8
100(4")	101	52			93	194	265	89	4.9
125(5")	124	56			113	207	265	113	6.8
150(6")	147	56			126	220	265	139	8.6
200(8")	197	56			157	275	350	191	13.1

FLANGE RATING : MULTI−DRILLING(5K,10K,PN10,PN16,150LB)

P.NO.	PART NAME	MATERIAL	Q'TY	REMARK
1	BODY	FC200	1	
2	DISC	SCS13	1	
3	SEAT RING	EPDM	1	
4	MAIN STEM	SUS410	1	
5	STUB STEM	SUS410	1	
6	O−RING HOLDER	ACETAL	1	
7	O−RING	EPDM	2	
8	O−RING	EPDM	1	
9	O−RING	EPDM	3	
10	STOP BOLT	SS400	1	
11	BOLT/O−RING/BOLT	SS400/NBR/SUS304	1SET	
12	INDICATOR	SS400	1	GALVANIZED
13	LEVER	ASS'Y	1	

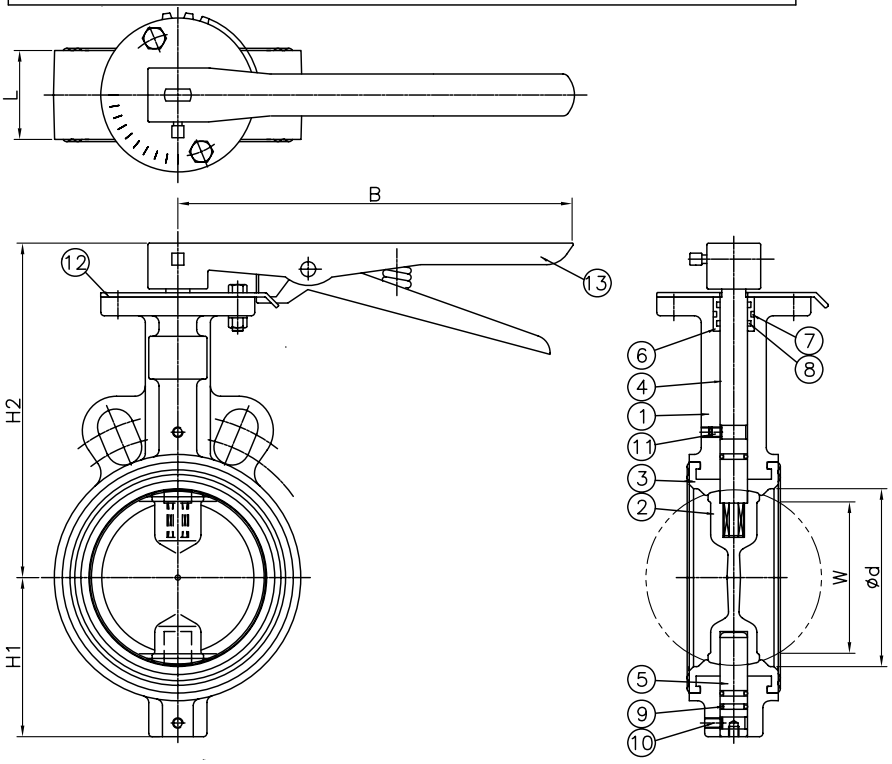

N O T E S

1. "W" DIMENSION IS THE MINIMUM ALLOWABLE FLANGE INSIDE DIAMETER OR PIPE INSIDE DIAMETER AT THE CENTERED BODY FACE WHEN IN THE OPEN POSITION

2. HYDROSTATIC TEST
   −BODY : 15 BAR
   −SEAT : 11 BAR

3. FACE TO FACE : ISO 5752

BL302NV

Butterfly valve, lugged design.

Suitable for hot water, air, gas and many chemicals

- **Body: Cast Iron**
- **Disc: 316 Stainless steel**
- **Seat: Viton**
- **End Connections: lugged design to suit ANSI 150**
- **Maximum pressure rating 1,000 kpa**
- **Maximum temperature rating 220 degrees C**
- **Sizes: 50mm to 200mm**

D I M E N S I O N S							UNIT: mm
NOMINAL DIAMETER	ød	L	FLANGE		H	B	W
			øC	n–h			
40(1.5”)	40	33	98.4	4–1/2”	155	205	27
50(2”)	50	43	120.7	4–5/8”	158	205	28
65(2.5’)	67	46	139.7	4–5/8”	169	205	51
80(3”)	79	46	152.4	4–5/8”	180	205	67
100(4”)	101	52	190.5	8–5/8”	194	265	89
125(5”)	124	56	215.9	8–3/4”	207	265	113
150(6”)	147	56	241.3	8–3/4”	220	265	139
200(8”)	197	60	298.5	8–3/4”	275	350	191
FLANGE RATING : ANSI #150							

P.NO	PART NAME	MATERIAL	Q'TY	REMARK
1	BODY	FC200	1	
2	DISC	SCS14	1	CF8M
3	SEAT RING	VITON	1	
4	MAIN STEM	SUS410	1	
5	STUB STEM	SUS410	1	
6	O–RING HOLDER	ACETAL	1	
7	O–RING	EPDM	2	
8	O–RING	EPDM	1	
9	O–RING	EPDM	1	
10	STOP BOLT	SS400	1	
11	BOLT/O–RING/BOLT	SS400/NBR/SUS304	1SET	
12	INDICATOR	SS400	1	GALVANIZED
13	LEVER	ASS'Y	1	

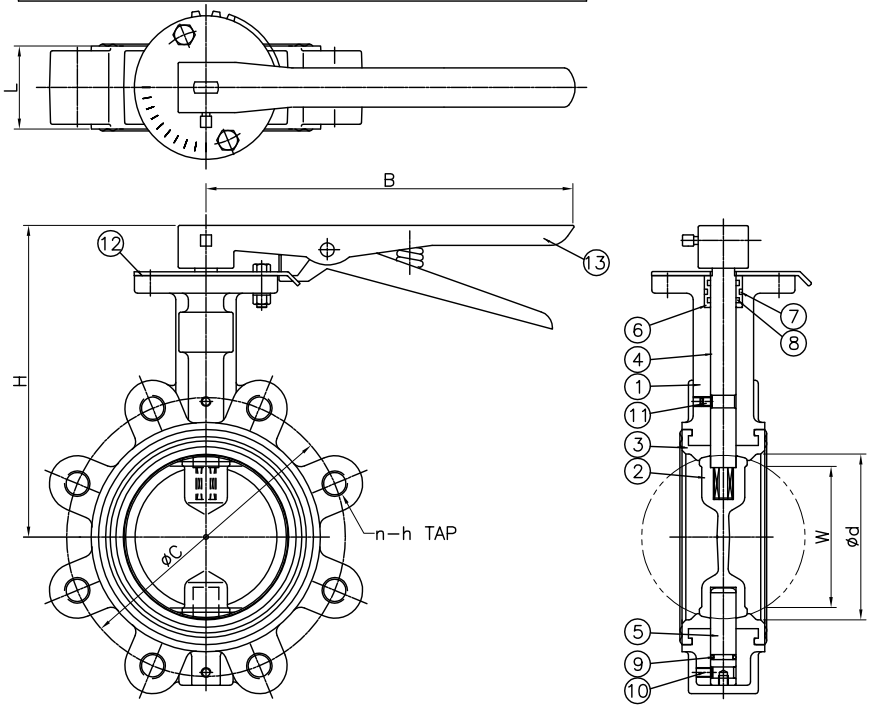

N O T E S

1. "W" DIMENSION IS THE MINIMUM ALLOWABLE FLANGE INSIDE DIAMETER OR PIPE INSIDE DIAMETER AT THE CENTERED BODY FACE WHEN IN THE OPEN POSITION
2. HYDROSTATIC TEST
   –BODY : 15 BAR
   –SEAT : 11 BAR
3. FACE TO FACE : ISO 5752

BLWCI15SP

Butterfly valve, wafer design.

Suitable for hot water, air, gas and many chemicals

- **Body: Cast Iron**
- **Disc: 316 Stainless steel**
- **Seat: PTFE**
- **End Connections: wafer design to suit ANSI 150, AS2129 Table E / D**
- **Maximum pressure rating 1,000 kpa**
- **Maximum temperature rating 204 degrees C**
- **Sizes: 50mm to 200mm**

D I M E N S I O N S — UNIT: mm

NOMINAL DIAMETER	ød	L	FLANGE øC	FLANGE n−øh	H1	H2	B	W
50(2")	50	43			61	158	205	28
80(3")	79	46			80	180	205	67

FLANGE RATING : MULTI−DRILLING(5K,10K,PN10,PN16,150LB)

D I M E N S I O N S — UNIT: mm

NOMINAL DIAMETER	ød	L	FLANGE øC	FLANGE n−øh	H1	H2	B	W
100(4")	102	52	190.5	8−19	110	212	205	91
150(6")	154	56	241.3	8−22	155	263	265	143

FLANGE RATING : ANSI #150

P.NO.	PART NAME	MATERIAL	Q'TY	REMARK
1	BODY	FC200	1	
2	DISC	SCS14	1	CF8M
3	SEAT	PTFE	1	
3−1	BACKUP SEAT	EPDM	1	
4	MAIN STEM	SUS410	1	
5	STUB STEM	SUS410	1	
6	O−RING HOLDER	ACETAL	1	
7	O−RING	EPDM	3	
8	O−RING	EPDM	1	
9	STOP BOLT	SS400	1	
10	BOLT/O−RING/BOLT	SS400/NBR/SUS304	1SET	
11	INDICATOR	SS400	1	GALVANIZED
12	LEVER	ASS'Y	1	

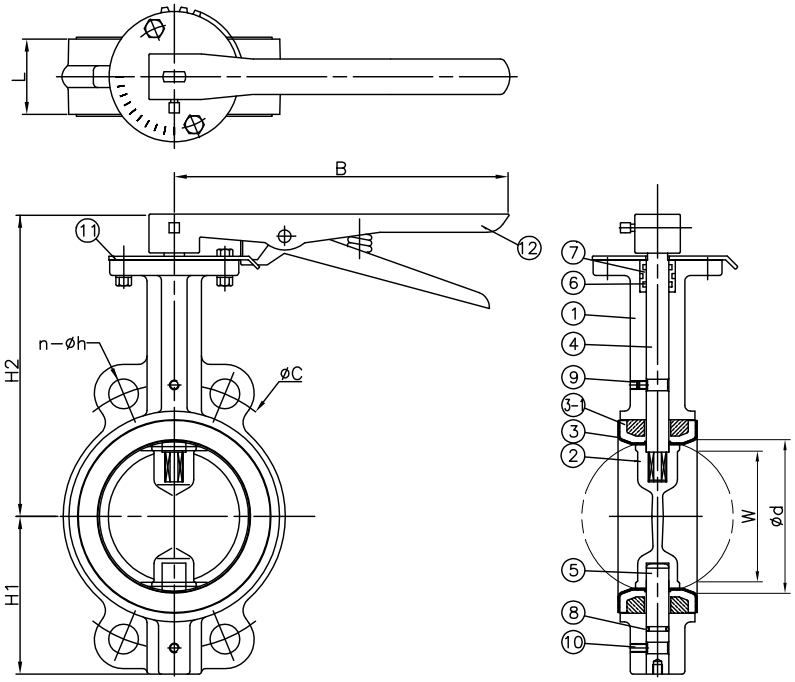

N O T E S

1. "W" DIMENSION IS THE MINIMUM ALLOWABLE FLANGE INSIDE DIAMETER OR PIPE INSIDE DIAMETER AT THE CENTERED BODY FACE WHEN IN THE OPEN POSITION

2. HYDROSTATIC TEST
   −BODY : 15 BAR
   −SEAT : 6 BAR

3. FACE TO FACE : ISO 5752

BLWS15SP

Butterfly valve, wafer design.

Suitable for hot water, air, gas and many chemicals

- **Body: 316 Stainless steel**
- **Disc: 316 Stainless steel**
- **Seat: PTFE**
- **End Connections: wafer design to suit ANSI 150, AS2129 Table E / D**
- **Maximum pressure rating 600 kpa**
- **Maximum temperature rating 204 degrees C**
- **Sizes: 20mm to 200mm**

DIMENSIONS UNIT: mm

NOMINAL DIAMETER	ød	L	FLANGE øC	FLANGE n-øh	H1	H2	B	W	WEIGHT (KG)
50(2")	50	43			61	158	205	28	2.7
65(2.5")	67	46			73	169	205	51	3.4
80(3")	79	46			80	180	205	67	3.8
100(4")	101	52			93	194	265	89	4.9
125(5")	124	56			113	207	265	113	6.8
150(6")	147	56			126	220	265	139	8.6
200(8")	197	56			157	275	350	191	13.1

FLANGE RATING : MULTI-DRILLING(5K,10K,PN10,PN16,150LB)

P.NO	PART NAME	MATERIAL	Q'TY	REMARK
1	BODY	SCS14	1	CF8M
2	DISC	SCS14	1	CF8M
3	SEAT	PTFE	1	
3	BACKUP SEAT	EPDM	1	
3	BACKUP RING	PHENOLIC	1	
4	MAIN STEM	SUS316	1	
5	STUB STEM	SUS316	1	
6	O-RING HOLDER	ACETAL	1	
7	O-RING	EPDM	2	
8	O-RING	EPDM	1	
9	O-RING	EPDM	1	
10	STOP BOLT	SS400	2	
11	BOLT/O-RING/BOLT	SS400/NBR/SUS304	1SET	
12	INDICATOR	SS400	1	GALVANIZED
13	LEVER	ASS'Y	1	

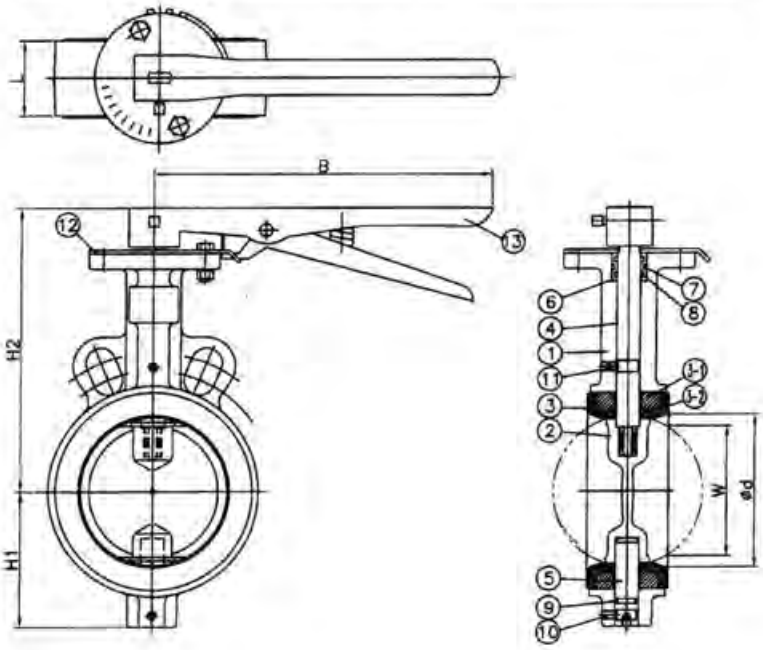

NOTES

1. "W" DIMENSION IS THE MINIMUM ALLOWABLE FLANGE INSIDE DIAMETER OR PIPE INSIDE DIAMETER AT THE CENTERED BODY FACE WHEN IN THE OPEN POSITION
2. HYDROSTATIC TEST
   -BODY : 15 BAR
   -SEAT : 6 BAR
3. FACE TO FACE : ISO 5752

CP460

Check valve, piston type, union cap.

Suitable for steam, water, air, gas and non corrosive chemicals

- **Body & cover: Bronze B61**
- **Disc & Seat: 410 Stainless steel**
- **End Connections: Screwed BSP**
- **Maximum pressure rating 4,000 kpa cold, 2,000 kpa steam**
- **Maximum temperature rating 215 degrees C**
- **Sizes: 15mm to 50mm**

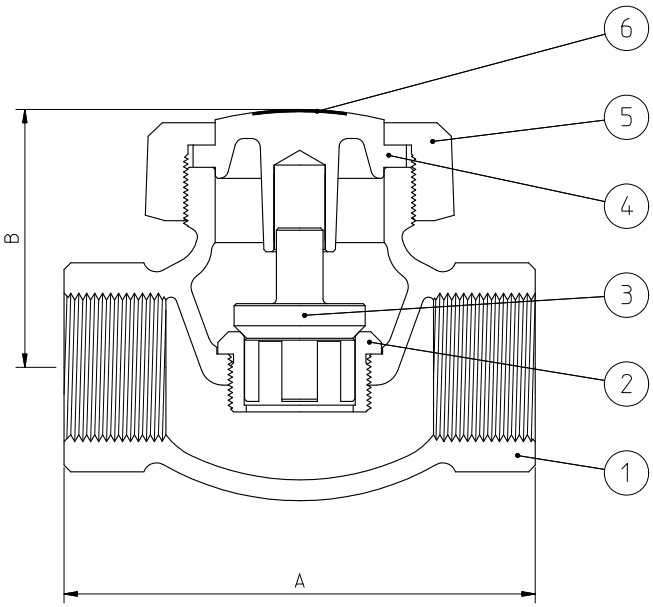

HIDROSTATIC TEST	
BODY	900 PSI (62 BAR)
SEAT	600 PSI (41 BAR)

WORKING CONDITIONS		
SATURATED STEAM	300 PSI (21 BAR)	NON SHOCK
WATER, OIL	600 PSI (41 BAR)	

	1/2"	3/4"	1"	1 1/4"	1 1/2"	2"
A	75	90	106	122	135	165
B	46	52	60	69	77	94

MAXIMUM TEMPERATURE = 232 °C

POS.	QUANT.	DENOMINATION	MATERIAL	ABNT SPECIFICATION	ASTM SPECIFICATION
6	01	IDENT. PLATE	ALUMINUM		
5	01	UNION BONNET RING	BRONZE	NBR6314/C92200	B62/C92200
4	01	BONNET	BRONZE	NBR6314/C83600	B62/C83600
3	01	DISC	ST. STEEL	NBR5601/410	A276/410
2	01	SEAT	ST. STEEL	NBR5601/410	A276/410
1	01	BODY	BRONZE	NBR6314/C83600	B62/C83600

NOTE: THE DIMENSIONS ARE EXPRESSED IN MILLIMETERS.

CS3SS10B

Check valve, 3-piece, in-line spring loaded type.

Suitable for steam, water, air, gas and most chemicals

- **Body, disc & seat: 316 stainless steel**
- **End Connections: Screwed BSP**
- **Maximum pressure rating 7,000 kpa cold**
- **Maximum temperature rating 185 degrees C**
- **Sizes: 15mm to 50mm**

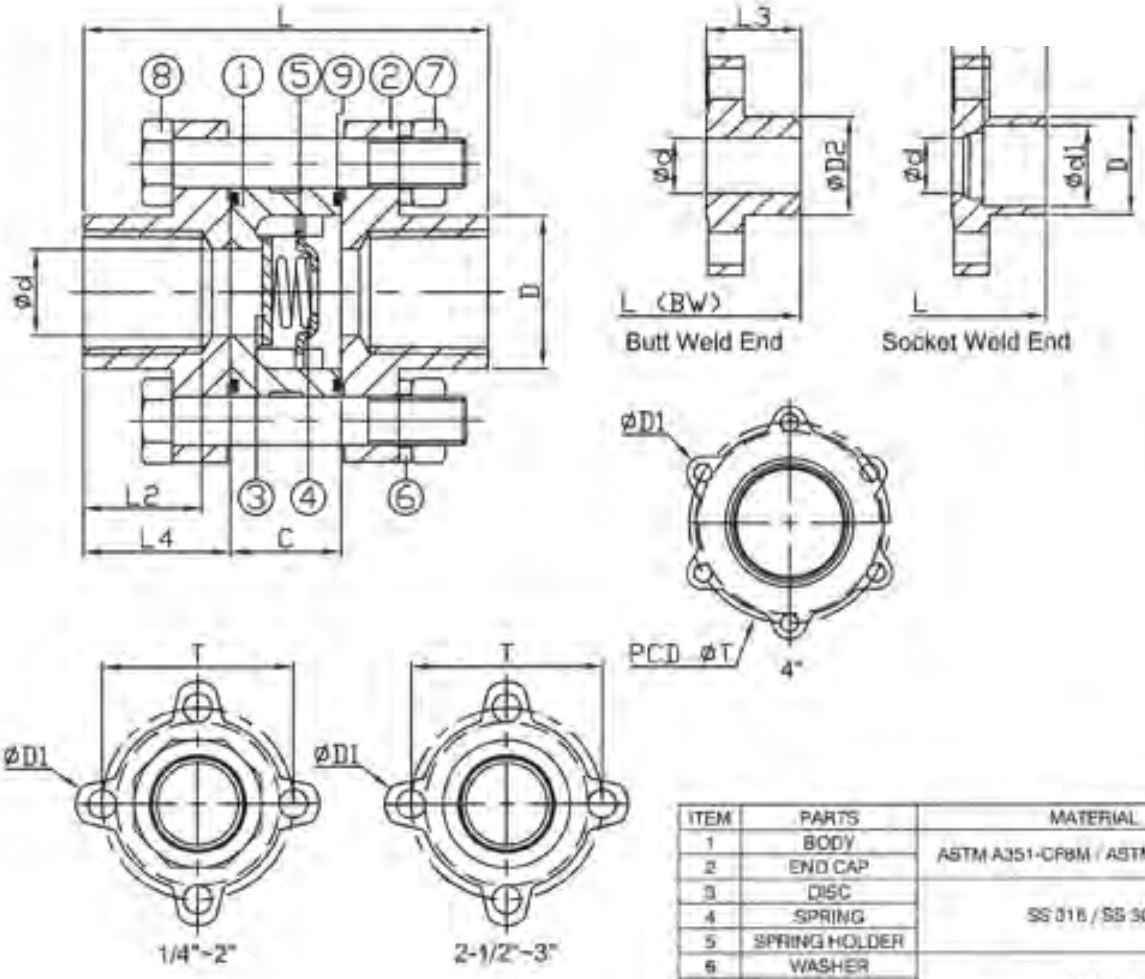

ITEM	PARTS	MATERIAL
1	BODY	ASTM A351-CF8M / ASTM A216-WCB
2	END CAP	
3	DISC	SS 316 / SS 304
4	SPRING	
5	SPRING HOLDER	
6	WASHER	SS 304
7	NUT	
8	BOLT	
9	SEAL	PTFE

DN	d	D1	L	L (BW)	L1	L2	L3	L4	C	D2	D1	D	T	Weight (kg)
8	11	14.3	61	68	15.5	18	24	21	19	14	12	32	26.5	0.8
10	13	17.5	69	86	16.5	18	24	23	19	20.5	13	35	34.5	0.9
15	14	21.5	73	87	17.5	18	24	23	19	22	14	38	42.7	0.9
20	19	27.4	77	91	14.1	20	26.5	25.5	24	28	15	50	51.7	0.8
25	25	34.1	91.5	99.5	19.7	25	30	29	29.5	31.5	19	58	64.7	1.7
32	31	42.7	91	94	17.7	25	29.5	30	30	40	19	46	78.7	1.1
40	38	48	97.5	102.5	19.5	29	31	33	37.5	48	19	58	89.7	1.1
50	49	61	117	117	22	37	38	35	47	60	19	69	98.7	1.3
65	64	77	131.5	131.5	24.3	35	42	42	47.5	76	19	91	128	4.2
80	76	90.2	143.5	143.5	25.7	36	50	54	53.5	91.5	19	102	150.5	5.2
100	97	116.5	174.5	174.5	31.5	40	60	60	70.5	121.5	19	127.5	188.5	11

SIGHT CHECKER - SCK

DESCRIPTION
Being installed after the steam trap, the sight checker is a device to be used for visually checking the conditions and leakage of steam traps.
SCK sight checker functions as both sight glass and check valve.
Connections are female screwed.

USE:	Condensate pipes downstream steam traps.
AVAILABLE MODELS:	SCK
SIZES:	½", 3/4" and DN 1"
CONNECTIONS:	Female screwed ISO 7/1Rp(BS21).
INSTALLATION:	Horizontal or vertical (bottom to top) installation. See IMI, installation and maintenance instructions.
CAUTION:	SCK should be fitted at least 1m from the trap in order to protect the glass from thermal pressure or shock.

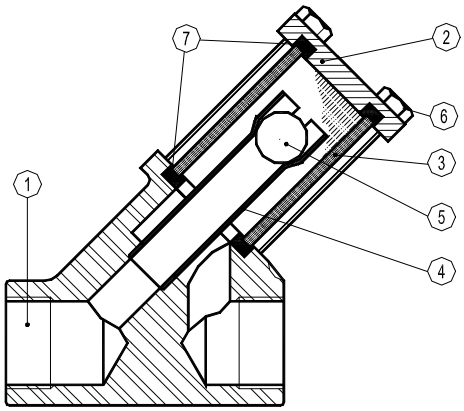

PMO – Max. operating pressure	10	bar
TMO – Max. operating temperature	150	ºC

How to order: i.e. SCK DN ½" BSP.

DIMENSIONS (mm)					
SIZE DN	***A***	***B***	***C***	***D***	***WGT. Kgs***
1/2"	80	36	45	95	0,9
3/4"	80	36	45	95	0,9
1"	90	40	56	110	1,3

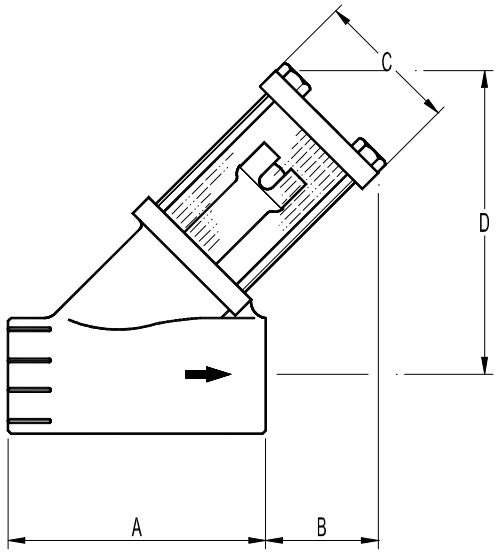

MATERIALS		
POS.Nr.	***DESIGNATION***	***MATERIAL***
1	Body	Bronze B62 / ASTM B148-97
2	Cover	Brass EN12165 / CuZn39Pb2
3	* Sight tube	Borosilicate glass
4	Discharge tube	Copper
5	Ball check	Stainless steel
6	Bolts	Seel 8.8
7	* Gasket	Graphite

*Available spare parts.

WAFER-TYPE NON-RETURN VALVE

RD40 DN15 – DN100

DESCRIPTION
The RD40 all stainless steel disc check valve has a compact design and was specially designed for use with steam and hot condensate.
Connections are flanged (wafer type)

MAIN FEATURES
Low pressure drop.
Simple and compact design.
Overall lengths according to DIN 3202 part 3-K4

OPTIONS:	Soft sealing : EPDM (E), NBR (N), VITON (V), PTFE (T). Inconel springs
USE :	Saturated steam, water and other gases (Group 2) compatible with the construction
AVAILABLE MODELS :	RD 40
SIZES :	DN 15 to DN 100
CONNECTIONS :	Sandwiched between flanges as per EN 1092 or ANSI.
INSTALLATION :	Horizontal or vertical installation See IMI, installation and maintenance instructions.
RATING :	PN 25 / PN 40
LIMIT OF OPERATION:	As per EN 1092

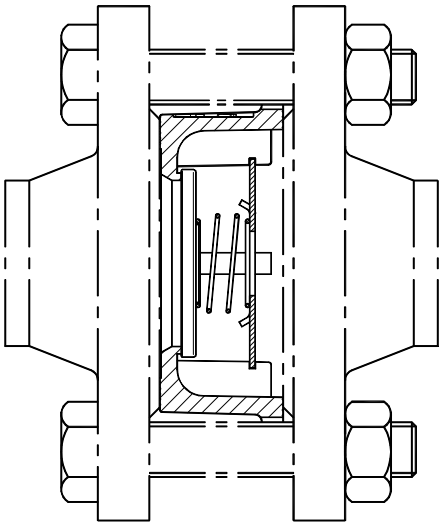

Recommended limit of operation with soft seats (ºC)			
EPDM (E)	NBR (N)	VITON (V)	PTFE (T)
130º	95º	180º	180º

CE MARKING (PED - European Directive 97/23/EC)		
PN 25	PN 40	Category
DN15 to DN40	DN15 to DN32	SEP - art. 3, paragraph3
DN50 to DN100	DN40 to DN80	Category 1 (CE Marked)
-	DN100	Category 2 (CE Marked)

WAFER-TYPE NON-RETURN VALVE

RD40 DN15 – DN100

DIMENSIONS (mm)									
DN	***15***	***20***	***25***	***32***	***40***	***50***	***65***	***80***	***100***
D1	43	53	64	75	86	96	115	132	152
D2	50	60	70	81	91	105	126	141	167
L	17	20	23	28	32	40	46	50	60
Kgs	0,18	0,2	0,25	0,5	0,7	1,3	1,7	2,8	4,5

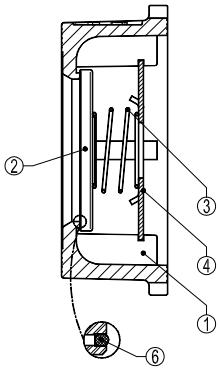

MATERIALS		
POS.	***DESIGNATION***	***MATERIAL***
1	Valve body	CF8M / 1.4408
2	*Disc	AISI316 / 1.4401
3	*Spring	AISI302 / 1.4300
4	Star	AISI316 / 1.4401
6	* Soft seal	See options

*Available spare parts

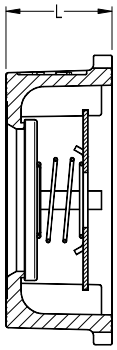

Minimum opening pressures with standard spring in mbar										
DN		***15***	***20***	***25***	***32***	***40***	***50***	***65***	***80***	***100***
D.P.	↑	25	25	25	27	28	29	30	31	33
D.P.	→	23	23	23	24	25	25	26	26	27
D.P.	↓	21	21	21	21	21	21	21	21	21
*D.P.	↑	2	2	2	3	4	4	5	5	6

* Vertical installation without springs (bottom to top). → Flow direction.

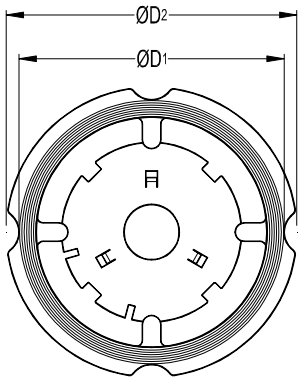

Pressure drop, horizontal flow, standard spring (water - 20°)

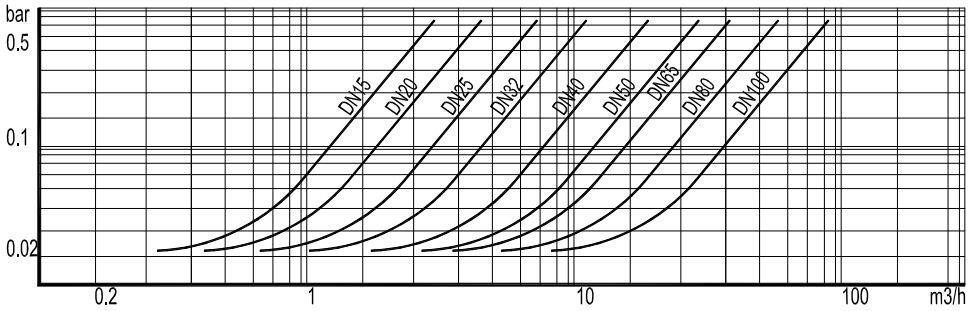

To determine the pressure drop of other mediums the equivalent water flow volume has to be calculated: $V_W = \sqrt{\frac{Q}{1000}} \times V$

Vw = Equivalent water flow volume in m3/h ; Q = Density in Kg/m3 ; V = Flow volume in m3/h

WAFER-TYPE NON-RETURN VALVE

RD40 DN 125 – DN 200

DESCRIPTION
The RD40 disc check valve has a compact design and was specially designed for use with steam and hot condensate.
Connections are flanged (wafer type)

MAIN FEATURES
Low pressure drop.
Simple and compact design.
Overall lengths according to DIN 3202 part 3-K4

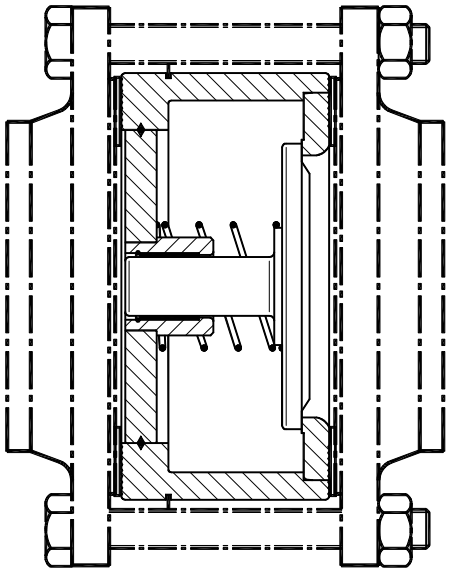

OPTIONS:	Soft sealing : EPDM (E), NBR (N), VITON (V), PTFE (T). Inconel springs
USE :	Saturated steam, water and other gases (Group 2) compatible with the construction
AVAILABLE MODELS :	RD 40
SIZES :	DN 125 to DN 200
CONNECTIONS :	Sandwiched between flanges as per EN 1092 or ANSI.
INSTALLATION :	Horizontal or vertical installation .See IMI, installation and maintenance instructions.
RATING :	PN 10 / PN 40
LIMIT OF OPERATION:	As per EN 1092

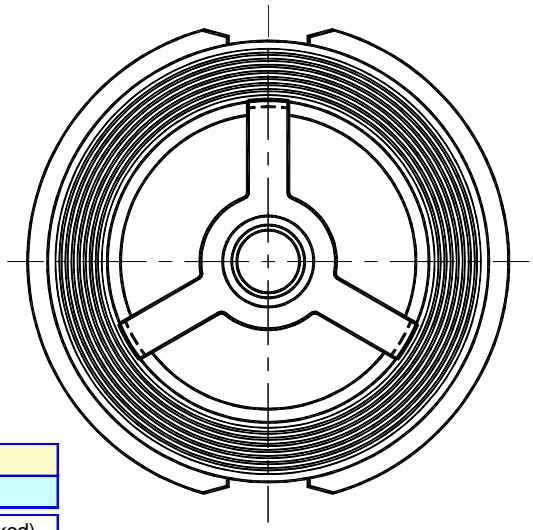

Recommended limit of operation with soft seats (ºC)			
EPDM (E)	NBR (N)	VITON (V)	PTFE (T)
130º	95º	180º	180º

CE MARKING (PED - European Directive 97/23/EC)			
PN 10/16	PN 25	PN 40	Category
DN125 to DN200	DN125	/	Category 1 (CE marked)
/	DN150-DN200	DN125	Category 2 (CE marked)
/	/	DN150-DN200	Category 3 (CE marked)

WAFER-TYPE NON-RETURN VALVE

RD40 DN 125 – DN 200

DIMENSIONS (mm)							
DN	*D1 PN10/16*	*D2 PN25*	*D2 PN40*	*D2 ANSI150*	*D2 ANSI300*	*L*	*Weight Kgs*
125	192	192	192	192	216	90	11
150	218	226	226	218	251	106	13,5
200	273	286	293	273	308	140	24

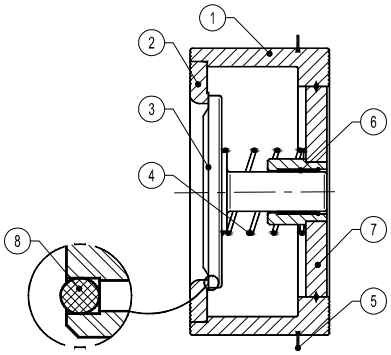

MATERIALS		
POS.	*DESIGNATION*	*MATERIAL*
1	Valve body	S355J2G3 / 1.0570
2	Seat	AISI316 / 1.4401
3	*Disc	AISI316 / 1.4401
4	*Spring	AISI302 / 1.4300
5	Centering ring	AISI304 / 1.4301
6	Bearing	Steel Fe Zn
7	Star	S355J2G3 / 1.0570
8	*Soft seal	See options

*Available spare parts

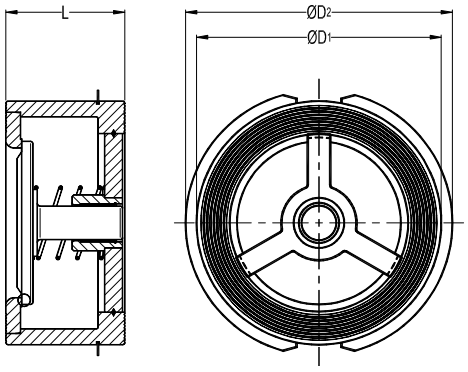

Minimum opening pressures with standard spring in mbar				
DN		*125*	*150*	*200*
D.P.	↑	37	40	46
D.P.	→	22	25	28
D.P.	↓	7	10	10
Flow direction.				

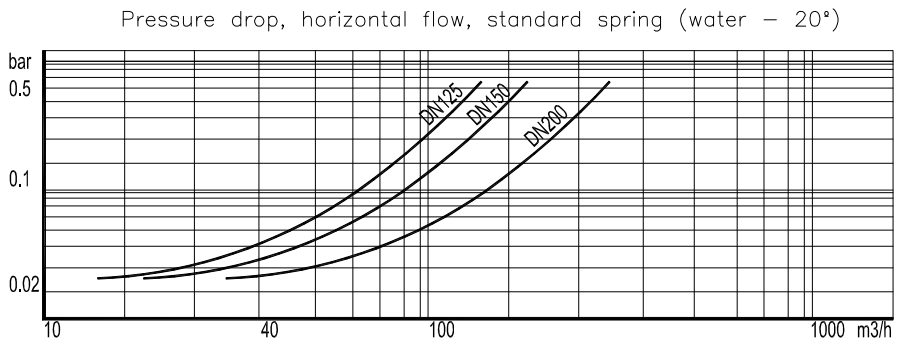

To determine the pressure drop of other mediums the equivalent water flow volume has to be calculated: $V_W = \sqrt{\frac{Q}{1000}} \times V$

Vw = Equivalent water flow volume in m3/h ; Q = Density in Kg/m3 ; V = Flow volume in m3/h

CKBC1508R

Swing type, bolted cover, Class 150#.

Suitable for steam, water, air, gas and non corrosive chemicals

- **Body & Cover: Cast Steel ASTM A216 Gr WCB**
- **Piston: 13% Chrome stainless steel**
- **Seat: Stellite #6**
- **End Connections: Flanged ANSI 150**
- **Maximum pressure rating: 1,171 at 260 deg C, 1,964 kpa at -29 to +35 deg C**
- **Sizes: 50mm to 200mm**

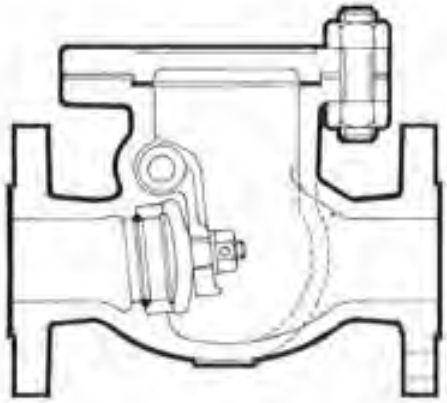

PART	MATERIAL	A.S.T.M.
Cover nut	Steel	A194 Gr 2H
Cover	Cast steel	*A216 Gr WCB
Cover stud	Alloy steel	A193 Gr B7
Gasket	Soft steel	
Hinge pin	13% chrome steel	A479-410
Hinge plug bolt	Steel	A307B
Hinge plug gasket	Soft steel	
Hinge	Cast steel	*A216 Gr WCB
Hinge nut	Steel	A307B
Body seat ring	Stellite faced	A108 Gr 1020 + St
Washer	Steel	
Split pin	Steel	A580-304
Disc	13% chrome steel	A217 CA15
Body	Cast steel	*A216 Gr WCB

*Carbon content 0.25% max

DIMENSIONS:

Nominal Size mm	50	65	80	100	150	200	250	300	350	400	450	500	600
A mm	203	216	241	292	356	495	622	699	787	864	978	978	1295
B mm	151	163	175	210	251	296	333	352	401	430	520	564	683
Approx Weight kg	17	22	31	50	92	136	195	285	420	500	640	780	1490

CKBS1512R

Swing type, bolted cover, Class 150#.

Suitable for steam, water, air, gas and non corrosive chemicals

- **Body & Cover: Stainless steel CF8M**
- **Disc: 316 stainless steel**
- **Seat: Stainless steel + Stellite #6**
- **End Connections: Flanged ANSI 150**
- **Maximum pressure rating: 1,171 at 260 deg C, 1,896 kpa at -29 to +35 deg C**
- **Sizes: 50mm to 200mm**

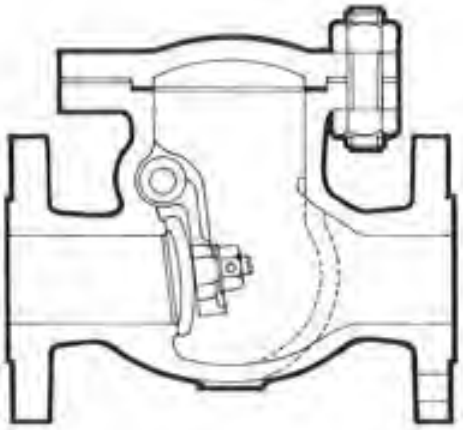

PART	MATERIAL	A.S.T.M
Cover	Stainless Steel	A351-CF8M
Cover Nut	Stainless Steel	A194-8
Cover Bolt	Stainless Steel	A193-B8
Gasket	Teflon	
Rod Pin	Stainless Steel	A479-316
Plug Bolt	Stainless Steel	A479-316
Plug Gasket	Teflon	
Arm	Stainless Steel	A351-CF8M
Arm Nut	Stainless Steel	A194-8
Split Pin	Stainless Steel	A580-316
Washer	Stainless Steel	A240-316
Disc	Stainless Steel	A351-CF8M
Body	Stainless Steel	A351-CF8M

DIMENSIONS

Nominal Size mm	15	20	25	40	50	65	80	100	150	200	250	300
A mm	108	117	127	165	203	216	241	292	356	495	622	699
B mm	76	80	96	114	144	162	171	190	238	266	323	354
Approx. Weight kg	2	3	4	7	13	18	21	34	59	102	139	209

Everlasting®

ROTATING DISC VALVES

• Temperatures to 1500 +F • Pressures to 10,000 psig • Abrasives • Corrosives • Coking • Slurries
• High Cycling • Bi-Directional • Intrinsically Fire Safe

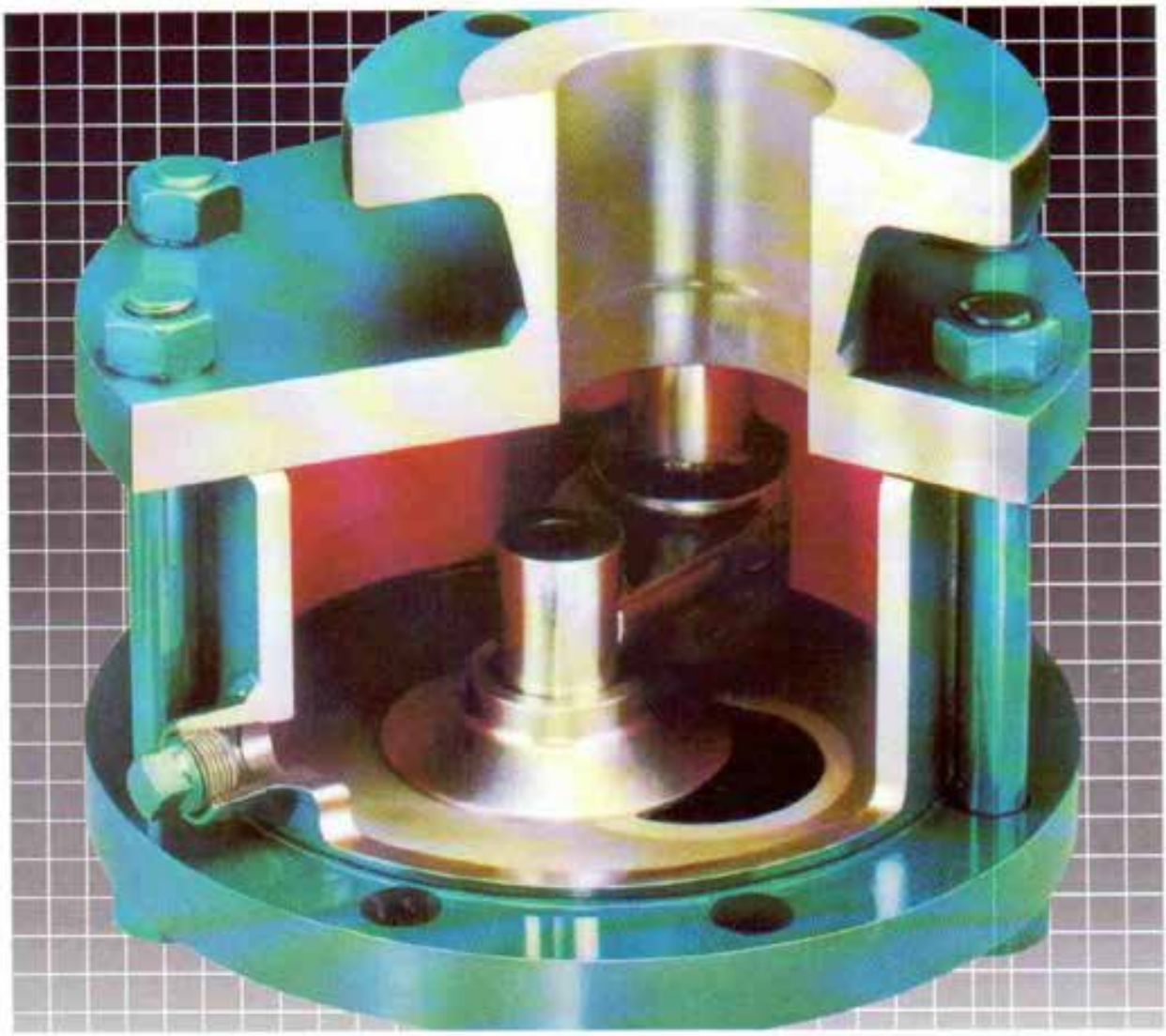

OVER 80 YEARS OF FIELD PROVEN SERVICE – WITH APPLICATIONS WORLDWIDE.

PROVEN CONCEPT Starting in 1904 the unique rotating shearing disc concept was the standard for steam locomotive boiler blowdown. Following this the packaged boiler industry has also accepted the Everlasting quick opening valve where our reputation remains unchallenged. The valve handles boiler blowdown, scale, chemicals, high pressures, temperatures, and flashing condensate, they have an average life of 16 years.

Our slurry valves are installed throughout the world in processes that are abrasive, corrosive or fouling and that have high pressure, temperature or cycling. The unique self lapping metal to metal seat design provides repeated tight shutoff in severe service, while sealing improves with use.

PRINCIPAL OF OPERATION The actuator moves the stem and lever arm a quarter turn which drives the disc. The entire sealing surface of the disc is constantly in contact with the seat or pad through force exerted by coiled springs. These springs allow the disc to move vertically. This compensates for thermal expansion and contraction of the valves components also overcoming the effect of any back pressure for which it was designed and prevents particles from lodging between the sealing surfaces. Differences in tangential disc to seat friction forces cause the disc to rotate on its seat as the valve cycles, thereby shearing and wiping away any process material that may accumulate. No other valve is similar.

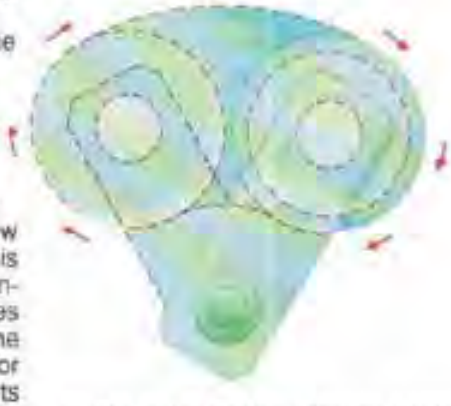

FEATURES AND BENEFITS

1. UNIQUE ROTATING/SHEARING DISC – Self lapping disc, enhance seat cleaning action, cuts through solids, long lasting tight shut-off
2. METAL TO METAL SEATING – abrasion resistance, wide temperature range.
3. WIDE BAND SEATING – High pressure capability, better sealing than industry standards, force distributed over larger area, less trim wear
4. FULL PORT – abrasion resistance, no obstruction to flow, minimal pressure drop.
5. ROTATING STEM – Increased packing life, wide selection of actuators.
6. SELF DRAINING BODY – Reduced chance of jamming due to material entrainment, stagnation and degradation.
7. BODY PURGE CONNECTIONS – Ability to flush valve cavity and internals while in operation.
8. SPRING LOADED CONNECTION BETWEEN DISC AND DRIVE – Allows disc to compensate for thermal expansion or contraction, adjusts for wear, ensures tight shut-off, resists back pressure
9. FLAT SEATING SURFACES – Ease of maintenance.
10. REPAIRABLE SEAT – Reduced inventory, less maintenance expense.
11. STEM BEARINGS – Trunion and sleeve bearings align stem, maximizing packing life, ease actuation, reduce maintenance
12. DESIGN SIMPLICITY/VERSATILITY – Minimal parts, ease of maintenance, long service life, adaptable

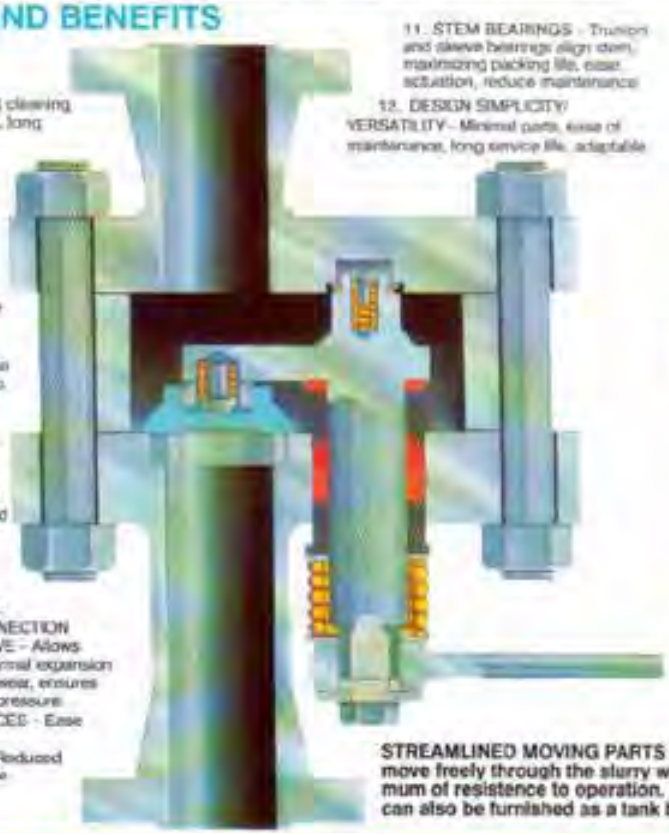

STREAMLINED MOVING PARTS are made to move freely through the slurry with a minimum of resistence to operation. This design can also be furnished as a tank bottom valve.

THREE WAY, DIVERTING, OR CONVERGING. This valve is shown in cast configuration suitable to 300 psig. Fabricated version is available for higher pressures and temperatures.

DURABILITY AND PERFORMANCE FOR SHUT OFF AND ISOLATION APPLICATIONS

SELF LAPPING, WEARS IN-NOT OUT Rotation of the disc produces an action that in the process medium renews and polishes the metal seating surfaces with each operation. This concept is unique causing the Everlasting valve to wear in with use while all other valves are busy wearing out.

TIGHT SEAL ASSURED The wide seat and disc surfaces are routinely machine lapped during manufacture within several light bands of flatness. This produces a seal that is better than industry standards for SHUT OFF and ISOLATION valves. (Refer to graph). Precision lapping and factory cycling of the valve can reduce leak rates further.

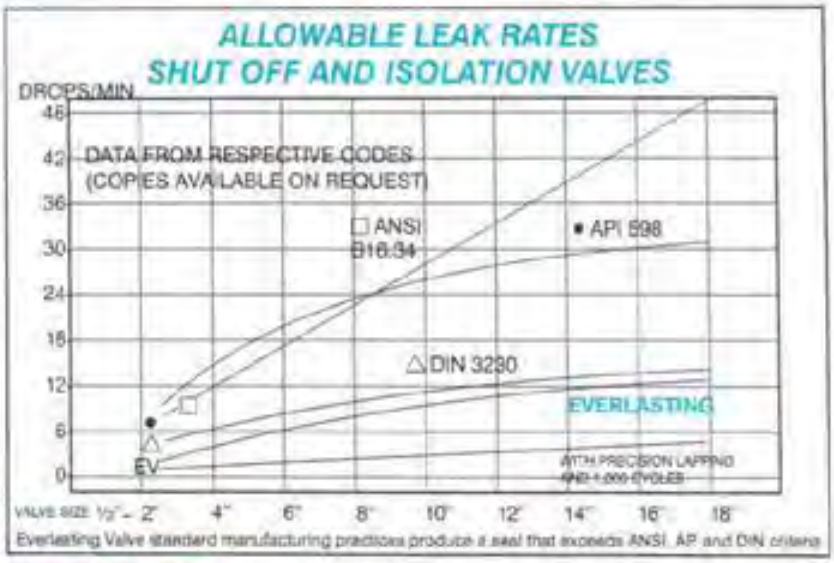

Everlasting Valve standard manufacturing practices produce a seal that exceeds ANSI, AP and DIN criteria

CONSTRUCTION

- SIZES ½" to 18"
- END CONNECTIONS:
  Screwed, flanged, socket and butt weld
- BODY MATERIAL:
  Cast Iron/Ductile Iron
  Carbon Steel
  Stainless Steel
  Weldable Alloys
  Packing Seals
  Grafoil or PTFE
- DISC/SEAT MATERIAL:
  Stellite #6
  440C Stainless Steel
- BASIS OF DESIGN:
  Vaccum to 10,000 PSIG
  ANSI Classes 150, 300, 600, 900, 1500, 2500
- TEMPERATURES:
  -350 F to 1500+F
- ACTUATORS:
  Manual Lever
  Manual Wheel
  Pneumatic
  Hydraulic
  Electric

SELF CLEANING The valve body openness provides space for the product to be freely displaced by the lever arm and disc with each cycle. Fines can not compact in small open areas and possibly jam components as is the case with other valve concepts. Each time the valve opens to discharge product, a vortex is caused by the eccentric body to port configuration. The settled media swirls, therby cleaning the valve's interior.

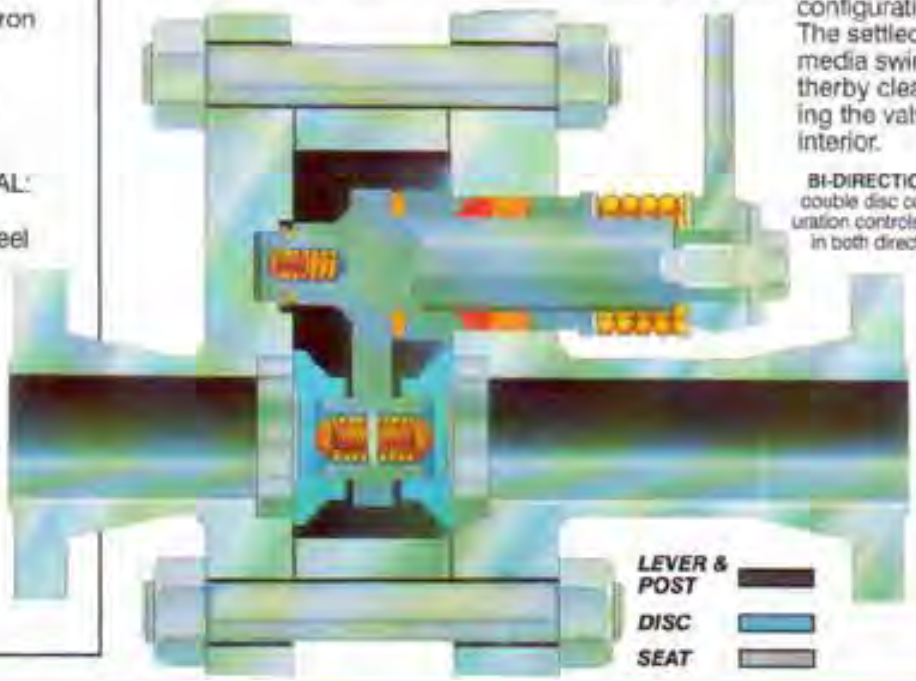

BI-DIRECTIONAL couble disc configuration controls flow in both directions.

Everlasting Abrasive Service Valves

Everlasting PROCESS and BULK MATERIAL VALVES are used where existing valves or rotary feeders are repaired or replaced more than once a year. Sizes range from 1/2" to 18", vacuum to class 2500, temperatures +1500° F.

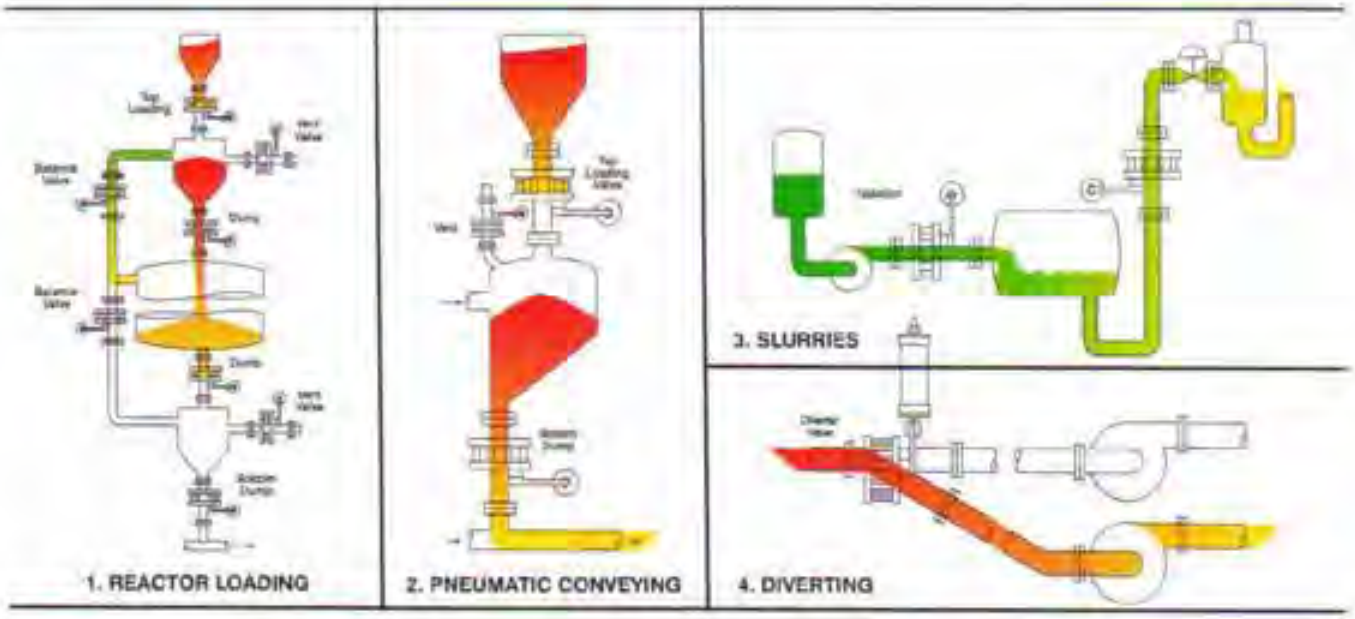

Their open body concept is self cleaning and incorporates precision flat lapped hard metal seats and discs that move in non-wedging, non-binding fashion through abrasive materials whether they are dry powders or in a slurry. Differences in tangential disc to seat friction cause the disc to rotate a few degrees with each cycle. This rotation polishes the mating surfaces improving the valves seal with each operation.
HERE ARE SOME APPLICATIONS

1. REACTOR LOADING
Everlasting valves are use to replace other valves or rotary feeders for reactors that can begin its process with positive pressure then drop to a negative pressure. Pressure Equalizing valves balance the loading or let-down hoppers so the reactor valves may cycle with zero differential. They also may cycle with a full differential. Pressure Equalizing valves are opened to either allow media to enter the loading hopper or the let-down hopper.

2. PNEUMATIC CONVEYING
Usually there are trains of two or more vessels that alternate continually to transport media. The vessel valves duty cycle are often less than once a minute. The vent valve being smaller is exposed to higher than system velocities, it must resist erosion from the particulate laden atmosphere being discharged between vessel cycles. Everlastings unique totaling disc valves are being bought for more of these systems with each day.

3. SLURRIES
Everlastings eccentric body configuration tends to swirl the flowing media. This design was developed over 86 years ago to handle solids specifically. Other types of valves allow the media to accumulate in small clearances around the seats or between its sealing member and body causing them to jam.

In this real situation the vessel volume is 16,000 cubic feet maintained above 500 psig including mine tailings dissolved in acid that exceeds 400°F. The isolation valves are normally open and cycle closed after several months operation for change out of a modulating flash let-down valve without losing system pressure. When the isolation valves fail to seal it takes nearly a day to bleed the system and half a week to start-up. Production loss is worth a small fortune, literally and so are yours. Space age metals and ceramics used alone could not overcome the attacks of corrosion, erosion, and agglomerating media. The Everlasting Process valves combined the latest materials and its unique design to solve this problem.

4. DIVERTING
The rotating disc concept is ideal for diverting flow to storage bins or silos and to isolate pumps for maintenance. Everlasting diverters remain operating for years in 65% coal and sludge slurries. Turn them around and they converge the process from separate sources into a single stream. There are no small spaces where fines can compact to jam its components. After the customer tested a dozen other manufacturers products in a simulated system the Everlasting Diverter design was selected for use in processing abrasive, corrosive, chemical waste.

Whether your applications require carbon, stainless steel or space age materials, you can give your abrasives handling problem to the Everlasting 86 year old workaholic.

Everlasting
VALVE COMPANY, INC.
ISO 9001 CERTIFIED COMPANY
EVERLASTING
PROCESS DIVERTER
DIVERTER VALVES
Switch on the fly, Dependably
For applications of erosive slurries or whenever abrasive solids are conveyed
Everlasting Valve Company, Inc.

The Everlasting Diverter that's built

Switch lines on-the-fly

A major cement company produced 55 ton/hour, but to switch lines they had to stop the compressor then take 15 minutes to come back to pressure. Each time the lines were switched 13.75 tons of product was not conveyed. With Everlasing Diverters there is no time lost. Are your down stream lines plugging, is the fringe bin full, do you have an off quality silo? How much are you losing with your present non-switch on the fly diverters? How much are your installed diverters costing you in parts, labor and lost production?

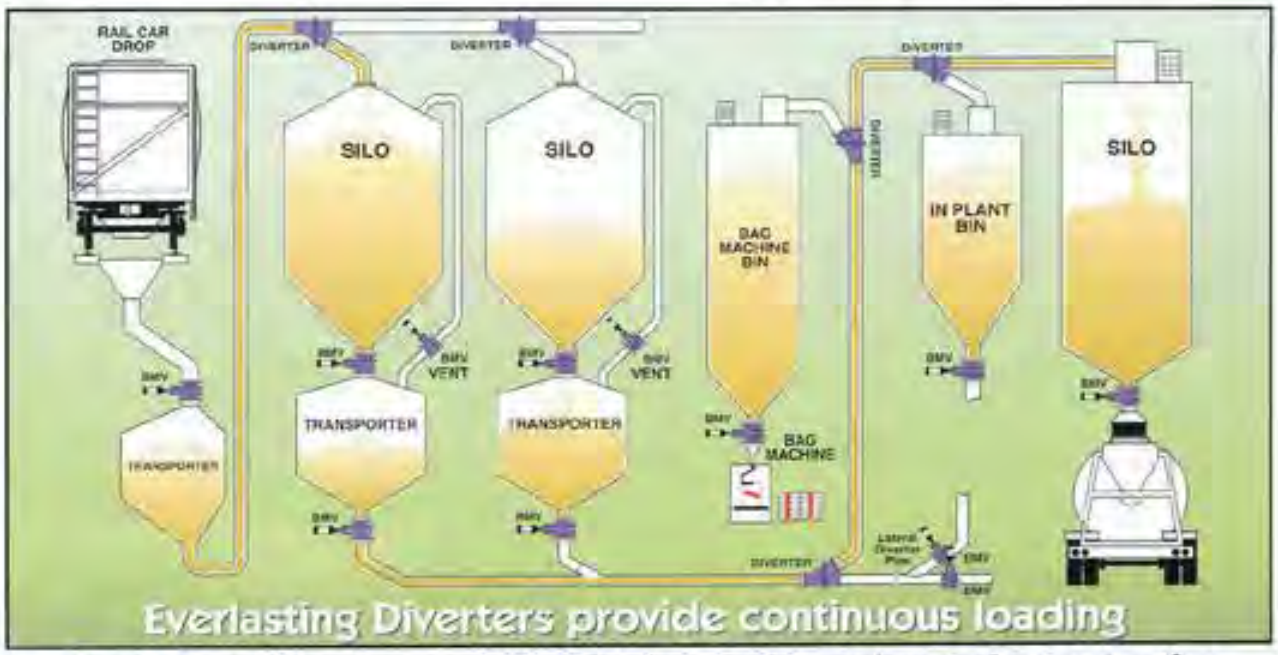

Everlasting Diverters are Self-Cleaning, Self-Lapping and Long-Lasting

SELF-CLEANING Everlasting valves are designed with an open valve body that provides ample room for free flowing media to be displaced by the small volume disc and lever arm. The eccentric body to pipe connections cause the media to swirl in the open body. With the lateral piped to a vertical line media drops by gravity then is discharged through the straight leg with the next cycle. The closed port seat and disc surfaces are always shielded from harsh media.

SELF-LAPPING SEALING SURFACES With each cycle the flat disc freely rotates around a spring loaded rivet internal to the disc drive. Disc rotation occurs as the center of friction under the disc seeks alignment with applied force. Scratches that may develop in the wide sealing surfaces are polished away as the disc moves from one port to the other. This feature is unique to Everlasting Valve. No other valve is similar.

Self-lapping Wears in Not out!

POSITIVE SHUT-OFF Machine lapping of the sealing surfaces at the factory assures tight shut off. Leak rates are less than industry standard ANSI B.16.34; MSS-SP61 for metal seated valves. Each valve is tested to assure seat and body integrity. The spring loaded disc is held firmly against the path that it travels. Having sharp edges the seat and disc shear away any deposits from their sealing surfaces. Valve may be used for Converging applications.

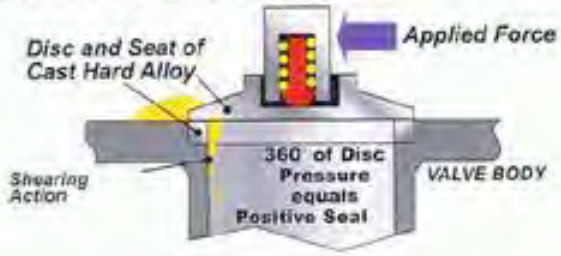

to handle your most abrasive media

Diverter dimensions specifications and options

Cast diverting valve cross section

Cast diverting valve end view

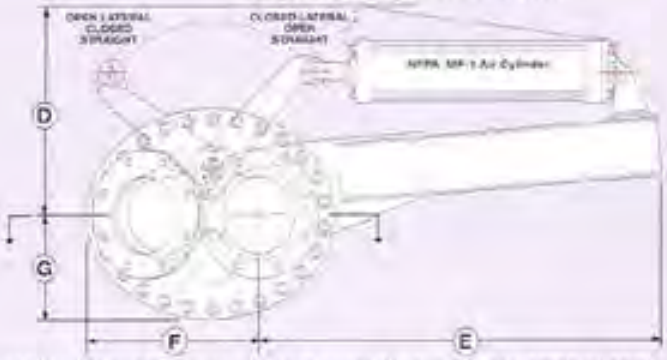

Material: Body cast iron, class 125 flanges, disc & seats hardened alloy 38RC to 59RC

Valve (mm)	A	B	C	D	E	F	G	Press/Temp Rating
4" (100)	22"	23 1/8"	23 1/8"	16 7/8"	31 1/8"	9 5/8"	6 1/8"	100 psi / 7 bar 450° F / 232° C
5" (125)	21 3/4"	19 3/8"	19 3/8"	17 1/2"	32 1/4"	12 7/8"	7 1/2"	
6" (150)	29"	23 1/8"	23 1/8"	21 1/4"	44"	12 7/8"	7 1/2"	
8" (200)	29 1/2"	25 1/4"	25 1/4"	20 1/2"	43 7/8"	19 1/8"	10 7/8"	
10" (250)	35 1/2"	30 3/8"	30 3/8"	23 1/8"	42 7/8"	21"	11 3/8"	
12" (300)	40"	35 3/8"	35 3/8"	23 7/8"	45 1/8"	22 1/4"	11 3/8"	

Process diverting valve cross section

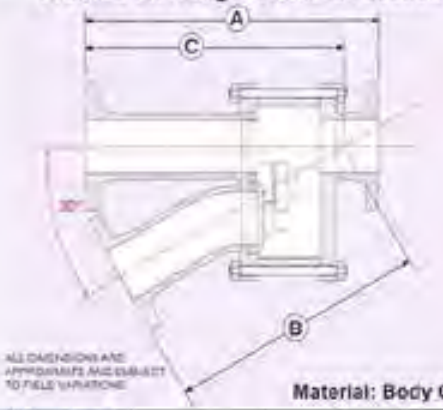

Process diverting valve end view

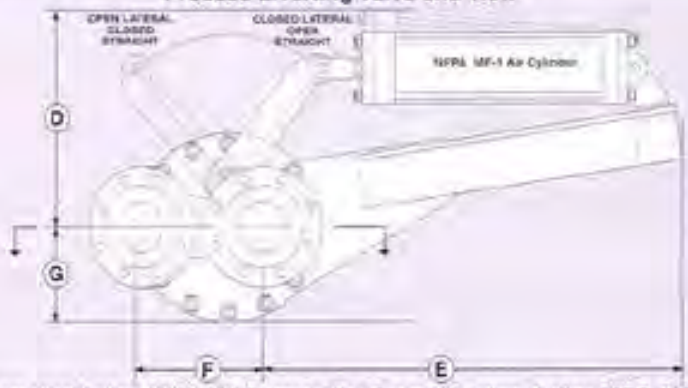

Material: Body Carbon steel / alloy ANSI, DIN flanges, disc & seats hardened alloy 38RC to 59RC

Valve (mm)	A	B	C	D	E	F	G	Press/Temp Rating
2" (50)	16 1/2"	12"	12"	10 7/8"	24 1/8"	6 3/8"	4 3/8"	ANSI B 16.34 CLASS 150.
3" (80)	19 1/2"	15 1/4"	15 1/4"	16 1/8"	33"	9 5/8"	6 1/2"	
4" (100)	21"	18 1/2"	18 3/8"	16 1/8"	31 1/2"	9 5/8"	7"	
6" (150)	22 1/2"	23"	23 1/8"	21"	44 1/4"	13 3/8"	9 5/8"	
8" (200)	26 1/2"	26 3/4"	26 1/2"	21 3/4"	41 5/8"	17"	12"	
10" (250)	30"	31 5/8"	31 1/2"	24 1/4"	47 7/8"	20 1/8"	14 1/4"	

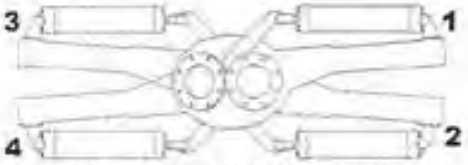

Actuator mounting positions code

ACTUATION		OPTIONS	
Lever, manual	standard	Solenoid valve	4-way
Wheel, manual	standard	Limit switches	Proximity or mechanical
Pneumatic cylinder	standard	Fail Safe	Air reservoir type or SR
Electric	optional		

Process Diverter standard materials of construction are carbon steel or stainless steel, other alloys are selected to suit your application. Disc and seats are solid hardened alloys in the 38RC to 59RC range for long life in abrasive media. Diverters are designed to ANSI codes and Everlasting will fabricate the valve to meet your process conditions. Various end connection configurations are available including DIN flanges. Please refer to www.everlastingvalveusa.com to download a Request For Quote form (RFQ). Start saving time and money today

Everlasting BMV series valves used in diverting lines

Everlasting Valve produces a complete line of Bulk Material Valves that when used in tandem with a fabricated lateral "Y" connection becomes a Diverter that can be used to divert, mix, or completely stop any media flow. The Everlasting BMV series uses the same proven and patented rotating disc and seat design that Everlasting is known for. Dynamic spring loaded stuffing box can be re-packed with valve in place.

Everlasting Bulk Material Valve

The Everlasting Diverter and BMV are excellent in fly ash, Portland cement, kiln dust, alumina hydrate, alumina silica, calcined kaolin, sugar, titanium dioxide, ilmenite and rutile ores, pet coke, coal, catalyst and many other abrasives. Please request our booklet on the Everlasting Bulk Material Valves. Dimensions in this booklet are approximate and are used for estimating.

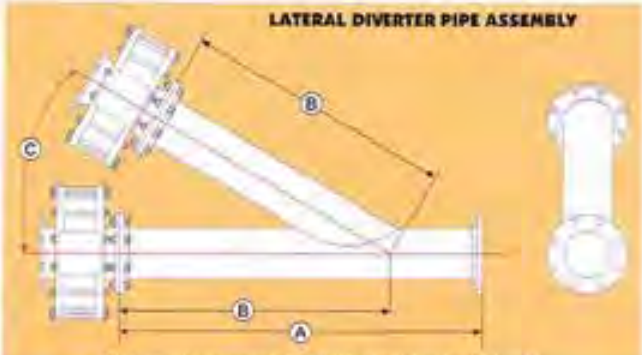

The following dimensions to be used as a guide for shop fabricator

Nominal (mm)	(C) Angle	(A) Straight	(B) Lateral / Intersect
3"-	30°	30"	24"
(80)	45°	21"	15"
4"-	30°	34"	28"
(100)	45°	24"	18"
5"-	30°	44"	32"
(125)	45°	30"	20"
6"-	30°	46"	36"
(150)	45°	40"	24"
8"-	30°	60"	46"
(200)	45°	48"	30"
10"-	30°	72"	54"
(250)	45°	54"	36"
12"-	30°	84"	66"
(300)	45°	62"	42"

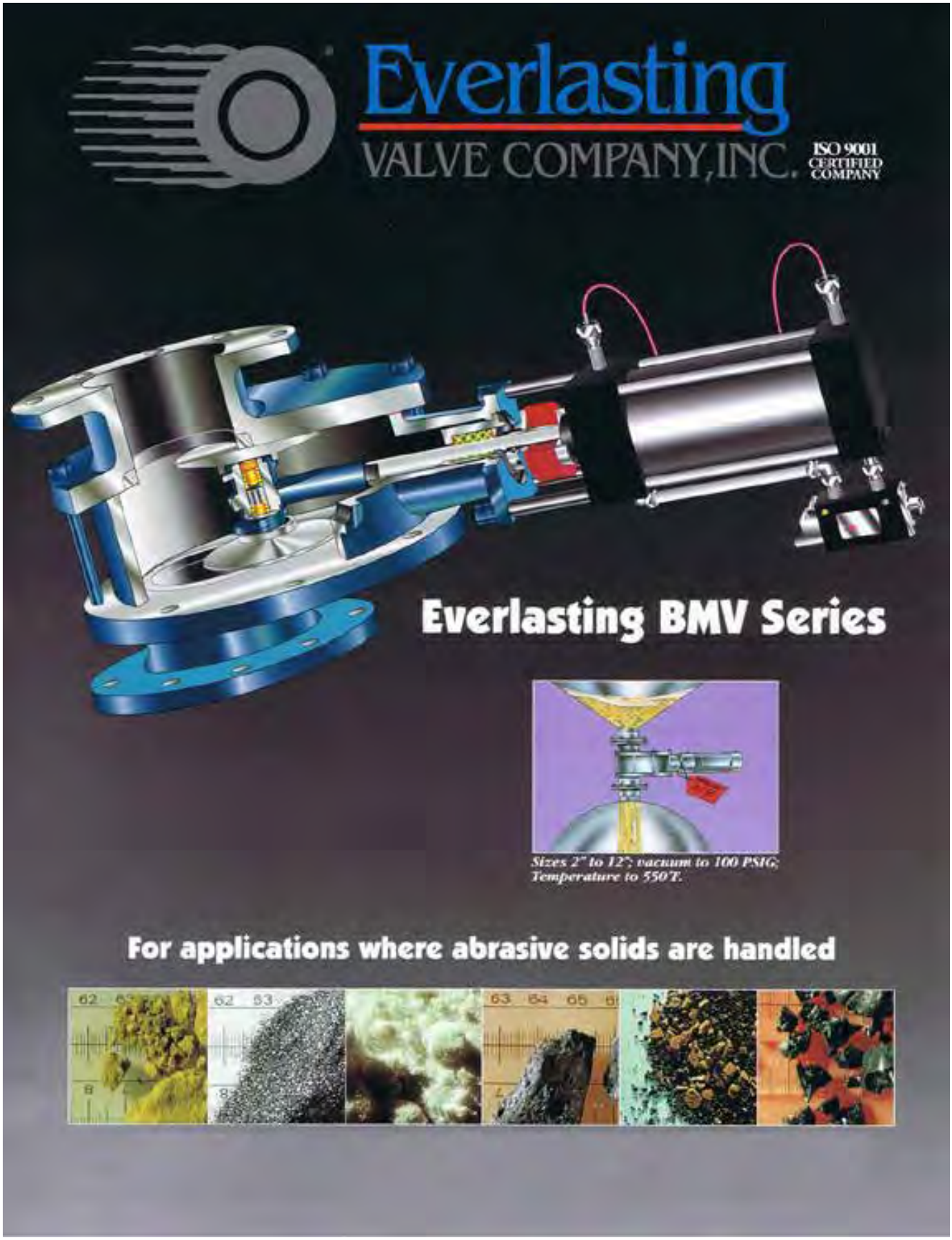
Everlasting
VALVE COMPANY, INC.
ISO 9001 CERTIFIED COMPANY
Everlasting BMV Series
Sizes 2" to 12"; vacuum to 100 PSIG; Temperature to 550°F.
For applications where abrasive solids are handled

The bulk material valve that's built to tak

Everlasting

Self Cleaning Internals

Its open body configuration allows fines to move about freely preventing accumulation that causes binding of moving parts or damage to seats in other traditional designs. Media has room to be displaced by the discs with each cycle and the eccentric body to port design promotes settled product to swirl each time the valve opens, thereby cleaning it's interior.

Sealing Surfaces Protected

The Rotating Shearing Disc concept since being introduced in 1904 has proven itself in applications where media is abrasive and erosive. The spring loaded discs are held firmly against the path they travel, then shields their sealing surfaces from exposure to any harsh process while the valve is open. Valve is bi-directional. Deposits that may form will be sheared from the sealing surfaces by sharp edges of the seat rings and rotating discs.

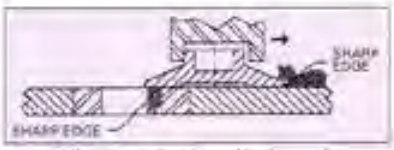

Shearing action clears disc face and its path of particulate.

Self Lapping Discs

They rotate as the center of the applied force and the centroid of friction force move toward alignment. High cycling is beneficial. Scratches that develop on the wide sealing surfaces are polished away as the valve is opened and closed, there is no similar valve.

U.S. PATENT 5,406,9[illegible]

Positive Shut Off

Machine lapping of the sealing surfaces at the factory assures tight shut off. Leak rates are less than industry standards for metal seated valves: ANSI B16.34, MSS-SP61.

Pneumatic Actuator and Valve Are Separated

Air cylinder standoff allows easy inspection of sealing means and facilitates field packing. Dynamically loaded stuffing box can be field packed without removing the valve from line. Special cylinder rod seal resists abrasion and tearing, and withstands temperatures to 400°f (+204°c) at point of contact.

Self lapping disc

Options

Air cylinder mounted proximity limit switches on single rod cylinder, or mechanical style with double ended cylinder. Electric solenoid or manually operated cylinder air valve. All NEMA classifications can be furnished to meet your specifications.

Plant air or electric loss fail safe protection using an electro-pneumatic air reservoir system is available. Special bracketing of the air cylinder increases valve temperature rating to 750°F.

The Everlasting bulk material valve.
A compact valve that performs where others require repairing or replacement more than once a year.

most abrasive situations year after year

Ideally suited for dense phase pneumatic conveying and line isolation in dry powder systems.

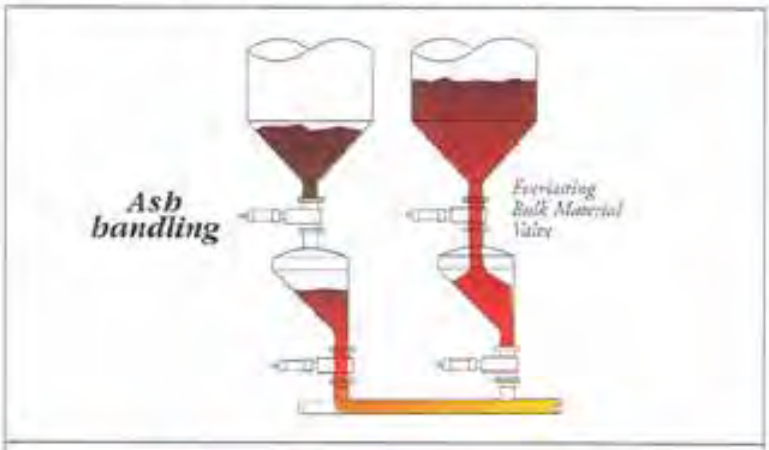

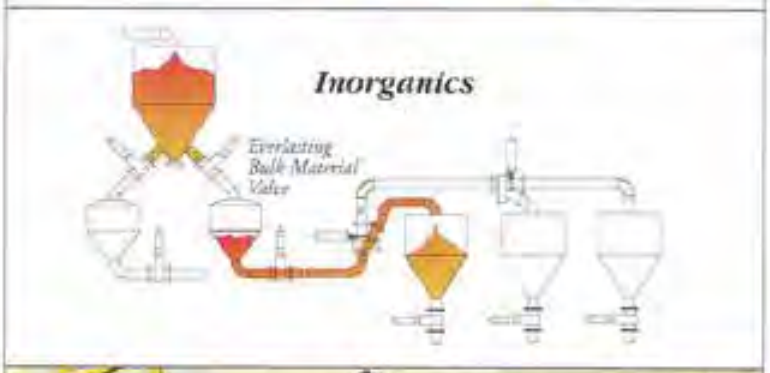

Everlasting solves plant problems.

Ash Handling

Problem: Sealing members would erode and have to be replaced on a weekly basis.
Solution: Flapper style valves cycling once a minute wouldn't always close against large chunks of 600°f vitrified coal ash trapped between its sealing members. Their disc would erode needing replacement on a weekly basis. The **Everlasting BMV** (bulk material valve) was installed providing trouble free service in this high temperature (see options), high cycling application.

Inorganics

Problem: Production is moving granular abrasives with a bulk density of over 100 lbs/ft3.
Solution: Everlasting Valves replaced transporter feed knife gate valves that developed internal and external leakage. Transporter outlets, now fitted with **Everlasting Valves**, replaced ball valves that suffered packing leaks. Our diverter valves have eliminated endless hours of maintenance in the finished product area that were previously spent repairing pinch valves. In each location the users enjoyed a fast pay back on their investment.

Diverter Valves

The **Everlasting Diverter Valves** can be switched on the fly, and no lubrication is required. The designs of each style are based on the open body Rotating Disc technology proven since 1904 in our two-way valves. The disc and seats are solid hardened alloys in the 38RC to 59RC range this provides exceptionally long life in abrasive media. These valves have performed in titanium dioxide, fly ash, Portland cement, Alumina silica and calcified Kaolin, sugar, coal and other erosive particulate. Actuators include lever, handwheel, pneumatic cylinder, the valves are flanged, and pressure and temperature ranges vary with design type.

Everlasting BMV series specifications

Standard Design:

Press Range: Vacuum to 100 psig (7 bar)
Temp Range: Cast Iron 450°F (+232°C)
Carbon Steel 550°F (+287°C)
Ends: Flat Faced – 125# Drill
Operator: Air Cylinder, Linear

U.S. Patent #5,396,919

Options:

- Limit or Proximity Switches
  * Field mounted Limit Switches or Visual Indication require Double Ended Air Cylinder
- Solenoid Valve
- Manual Air Valve
- Fail-Safe Air Reservoir
- 750°F (+400°C) Design

Process Valve pressures from vacuum to 10,000 psig, temperatures to +1,500°F, sizes 1/2" to 18"

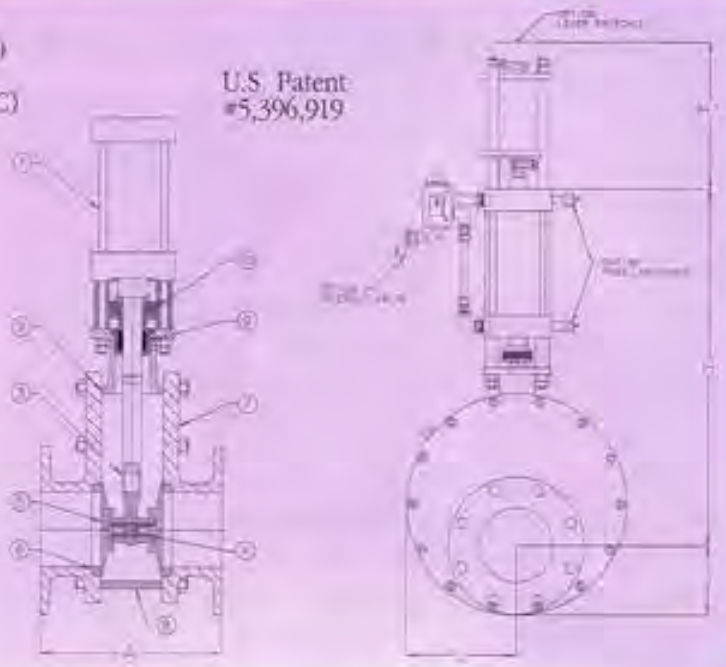

Item No.	Nomenclature	Construction
1	Air Cylinder	Aluminum Body
2	Gaskets	Synthetic Fiber - Nitrile Binder
3	Disc Drive	Hardened Steel Alloy
4	Disc Springs	17-7 Stainless Steel
5	Discs	440 Stainless Steel
6	Seats	440 Stainless Steel
7	Body	Cast Iron or Carbon Steel
8	Distance Ring	Cast Iron or Carbon Steel
9	Stuffing Box	Brass - Zerac/Graphite Packing
10	Gland Springs	Electroless Nickel Plated

Inquire for other sizes. Dimensions are approximate: use for estimating. Consult factory for construction drawings.
*Cast Iron only **Carbon Steel only

Size in. (mm)	A	H	H'	J	L	Wt. approx. lb (kg)
2* (50)	7 (179)	17.375 (440)	7 (178)	3 (76)	3.75 (95)	60 (27)
2.5 (65)	8.25 (210)	19.25 (489)	7.5 (196)	3.5 (89)	5 (127)	65 (30)
3 (80)	8.25 (210)	19.5 (495)	8 (203)	3.75 (95)	5 (127)	70 (32)
4 (100)	9.75 (248)	23 (584)	9 (229)	4.5 (114)	6.25 (159)	110 (50)
5 (125)	10.5 (267)	25.5 (648)	11 (280)	5 (127)	7.75 (196)	180 (82)
6 (150)	10.5 (267)	28.75 (730)	12 (305)	5.5 (140)	9 (229)	220 (100)
8 (200)	13.5 (343)	36 (915)	13.5 (343)	7 (178)	11.5 (292)	350 (160)
10** (250)	15 (381)	41.25 (1049)	13 (330)	8.13 (207)	13 (330)	480 (220)
12** (300)	15 (381)	47.875 (1216)	18 (457)	9 (229)	15.5 (394)	700 (320)

How to order Bulk Material Valve: Figure number example: 6" BAO-SVGO

Six inch Bulk Material Valve, cast iron construction, outside stuffing box, solenoid valve, GO proximity limit switches. Materials of construction stated above are standard. Mechanical and field mounted limit switches require double-ended air cylinders.

Series	Body	Options	
B - BMV	**A** - Cast Iron **C** - Carbon Steel	**SV** - Solenoid Void **GO** - "GO" Proximity Switches **EX** - Mechanical Limit Switches (H') **MV** - Manual Air Valve	**FS** - Fail-Safe Air Reservoir System **HT** - High Temperature (750°F) **SP** - Special Accessories or Design

GABF8008N(S)

Gate valve, OS&Y, bolted bonnet, Class 800#.

Suitable for steam, water, air, gas and non corrosive chemicals

- **Body & bonnet: Forged Steel ASTM A105**
- **Wedge: 13% Chrome stainless steel**
- **Seat: ASTM A276-410 + Stellite #6**
- **End Connections: Screwed NPT or socket weld**
- **Maximum pressure rating: 5,512 at 454 deg C, 13,780 kpa at -29 to +35 deg C**
- **Sizes: 15mm to 50mm**

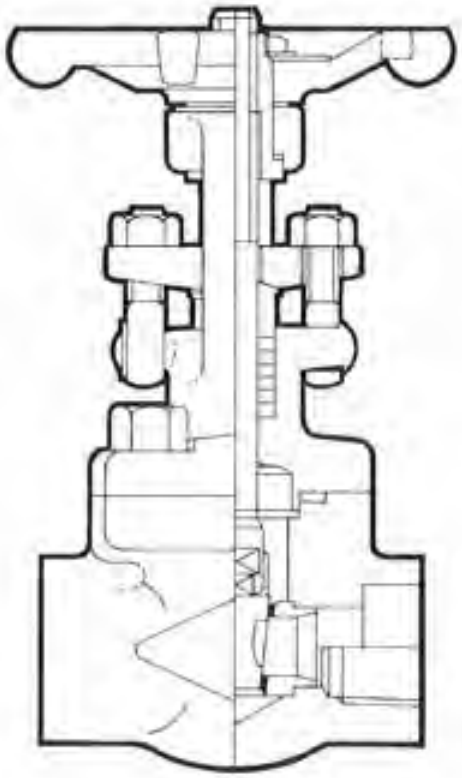

PART	MATERIAL	A.S.T.M.
Handwheel nut	Carbon steel	A563A
Tooth washer	Carbon steel	
Name plate	Aluminum	
Hand wheel	Malleable iron	A197
Yoke sleeve	13Cr Stainless steel	A582-416
Thrust washer	13Cr Stainless steel	A276-410
Eye bolt	13Cr Stainless steel	A276-410
Gland nut	Carbon steel	A194-2H
Gland flange	Forged steel	*A105
Gland	13Cr Stainless steel	A276-410
Retaining washer	Carbon steel	A283 D
Gland packing	Non-asbestos	
Bonnet Bolt	Alloy steel	A193-B7
Bonnet	Forged steel	*A105
Gasket	304 Hoop-teflon	
Stem	13Cr Stainless steel	A276-410
Seat ring	13Cr S/S + Stellite #6	A276-410
Wedge	13Cr Stainless steel	A217-CA15
Body	Forged steel	*A105

*Carbon content 0.03%-max.

DIMENSIONS:

Nominal Size mm	8	10	15	20	25	40	50
A mm	76	76	76	86	102	117	133
B mm (open)	145	145	145	153	192	245	267
C mm	102	102	102	102	114	140	165
Approx Weight kg	1.5	1.5	1.5	2.0	2.8	5.2	8.2

GABC1508R

Gate valve, OS&Y, bolted bonnet, Class 150#.

Suitable for steam, water, air, gas and non corrosive chemicals

- **Body & bonnet: Cast Steel ASTM A216 Gr WCB**
- **Wedge: 13% Chrome stainless steel**
- **Seat: ASTM A105 + Stellite #6**
- **End Connections: Flanged ANSI 150**
- **Maximum pressure rating: 1,171 at 260 deg C, 1,964 kpa at -29 to +35 deg C**
- **Sizes: 50mm to 200mm**

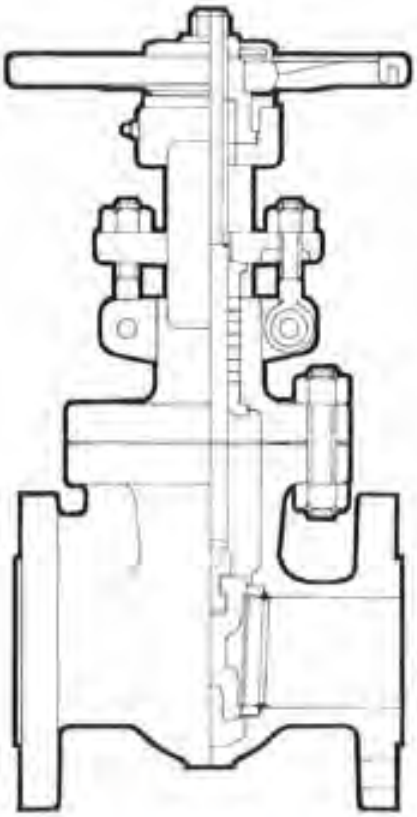

PART	MATERIAL	A.S.T.M.
Handwheel nut	Malleable iron	A47 Gr 32510
Handwheel set screw	Steel	
Handwheel	Malleable iron	A197
Yoke sleeve ret. nut	Steel	A47 Gr 32510
Yoke sleeve	Austen duct. iron	A439 Type D2C
Lubricator	Steel	
Spindle	13% chrome steel	A479-410
Gland nut	Steel	A307B
Gland flange	Steel	A105
Gland follower	Steel chrome plated	A108 Gr 1020 + Cr
Gland eye bolt	Alloy steel	A307B
Gland hinge pin	Steel	A108 Gr 1020
Gland packing	JIC 3085	Non-Asbestos
Bonnet nut	Steel	A194 Gr 2H
Bonnet stud	Alloy steel	A193 Gr B7
Bonnet	Cast steel	*A216 Gr WCB
Gasket	Soft steel	
Back seat bush	13% chrome steel	A479-410
Body seat ring	Stellite faced	A108 Gr 1020 + St
Wedge	13% chrome steel	A217-CA15
Body	Cast steel	*A216 Gr WCB

*Carbon content 0.25% max

DIMENSIONS

Nominal Size mm	50	65	80	100	150	200	250	300	350	400	450	500	600
A mm	178	191	203	229	267	292	330	356	381	407	432	457	508
B mm (open)	367	397	458	560	763	960	1166	1369	1515	1824	1900	2124	2502
C mm	200	200	224	250	315	335	400	450	500	560	630	710	800
Approx Weight kg	19	26	33	48	87	129	190	280	410	580	875	842	1380

GABC3008R

Gate valve, OS&Y, bolted bonnet, Class 300#.

Suitable for steam, water, air, gas and non corrosive chemicals

- **Body & bonnet: Cast Steel ASTM A216 Gr WCB**
- **Wedge: 13% Chrome stainless steel**
- **Seat: ASTM A105 + Stellite #6**
- **End Connections: Flanged ANSI 300**
- **Maximum pressure rating: 1,860 at 454 deg C, 5,100 kpa at -29 to +35 deg C**
- **Sizes: 50mm to 200mm**

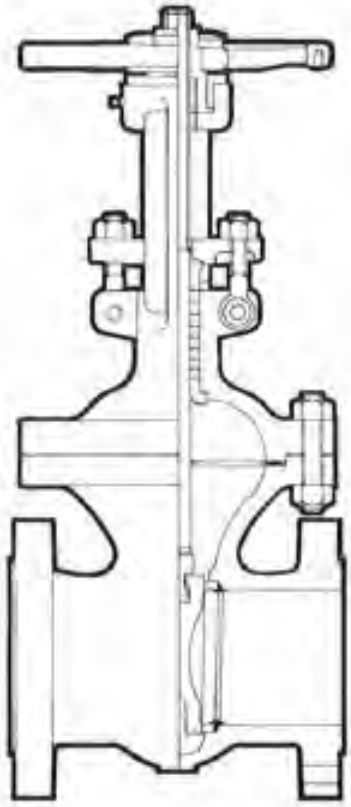

PART	MATERIAL	A.S.T.M.
Handwheel nut	Malleable iron	A47 Gr 32510
Handwheel set screw	Steel	
Handwheel	Malleable iron	A197
Yoke sleeve ret. nut	Steel	A47 Gr 32510
Yoke sleeve	Austen. duct iron	A439 Type D2C
Lubricator	Steel	
Spindle	13% chrome steel	A479-410
Gland nut	Steel	A307B
Gland flange	Steel	A105
Gland follower	Steel chrome plated	A108 Gr 1020 +Cr
Gland eye bolt	Alloy steel	A307B
Gland hinge pin	Steel	A108 Gr 1020
Gland packing	JIC 3085	Non-Asbestos
Lantern Ring	13% chrome steel	A479 410
Bonnet nut	Steel	A194 Gr 2H
Bonnet stud	Alloy steel	A193 Gr B7
Bonnet	Cast steel	*A216 Gr WCB
Gasket	Soft steel	
Back seat bush	13% chrome steel	A479-410
Body seat ring	Stellite faced	A108 Gr 1020 + Sti
Wedge	13% chrome steel	A217 CA15
Body	Cast steel	*A216 Gr WCB

*Carbon content 0.25% max.

DIMENSIONS

Nominal Size mm	50	65	80	100	150	200	250	300	350	400	450	500	600
A mm	216	241	283	305	403	419	457	502	762	838	914	991	1143
B mm (open)	405	440	500	592	816	1042	1227	1442	1588	1890	2040	2197	3078
C mm	200	200	224	250	355	400	450	500	560	620	710	800	900
Approx Weight kg	28	35	50	75	145	260	323	481	682	972	1260	1611	2470

GABS8008N(S)

Gate valve, OS&Y, bolted bonnet, Class 800#.

Suitable for steam, water, air, gas and most chemicals

- **Body & bonnet: 316L Stainless steel**
- **Wedge: 316L Stainless steel**
- **Seat: Stainless steel + Stellite #6**
- **End Connections: Screwed NPT or socket weld**
- **Maximum pressure rating: 5,930 at 454 deg C, 11,032 kpa at -29 to +35 deg C**
- **Sizes: 15mm to 50mm**

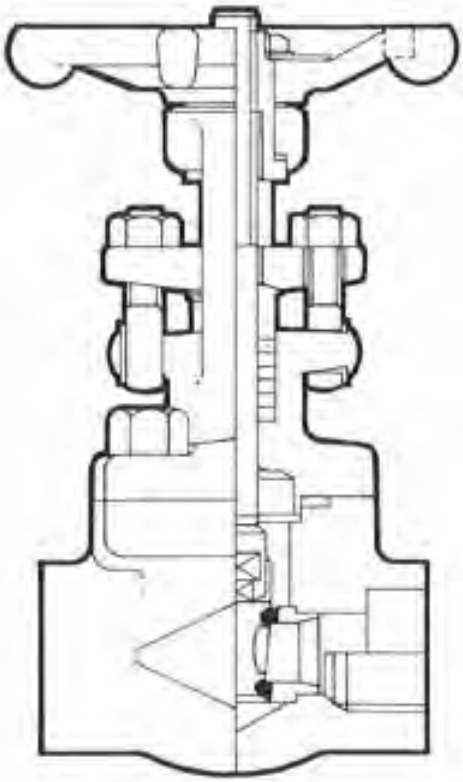

PART	MATERIAL	A.S.T.M.
Handwheel Nut	Carbon Steel	A563A
Tooth Washer	Carbon Steel	
Name Plate	Stainless Plate	
Hand Wheel	Malleable Iron	A197
Yoke Sleeve	13Cr Stainless Steel	A582-416
Thrust Washer	13Cr Stainless Steel	A276-410
Eye Bolt	Stainless Steel	A276-304
Gland Nut	Stainless Steel	A194-8
Gland Flange	Stainless Steel	A182-F304
Gland	Stainless Steel	A276-304
Retaining Washer	Stainless Steel	A276-304
Gland Packing	Grafoil	
Bonnet Bolt	Stainless Steel	A193-B8
Bonnet	Stainless Steel	A182-F316L
Gasket	304 Hoop-Teflon	
Stem	Stainless Steel	A276-316
Seat Ring	S/S + Stellite #6	A276-316
Wedge	S/S + Stellite #6	A351-CF8M
Body	Stainless Steel	A182-F316L

DIMENSIONS

Nominal Size mm	8	10	15	20	25	40	50
A mm	76	76	76	86	102	117	133
B mm (open)	145	145	145	153	192	245	267
C mm	102	102	102	102	114	140	165
Approx. Weight kg	1.5	1.5	1.5	2.0	2.8	5.1	8.2

GABS1512R

Gate valve, OS&Y, bolted bonnet, Class 150#.

Suitable for steam, water, air, gas and most chemicals

- **Body & bonnet: Stainless steel CF8M**
- **Wedge: 316 stainless steel**
- **Seat: Stainless steel + Stellite #6**
- **End Connections: Flanged ANSI 150**
- **Maximum pressure rating: 1,171 at 260 deg C, 1,896 kpa at -29 to +38 deg C**
- **Sizes: 50mm to 200mm**

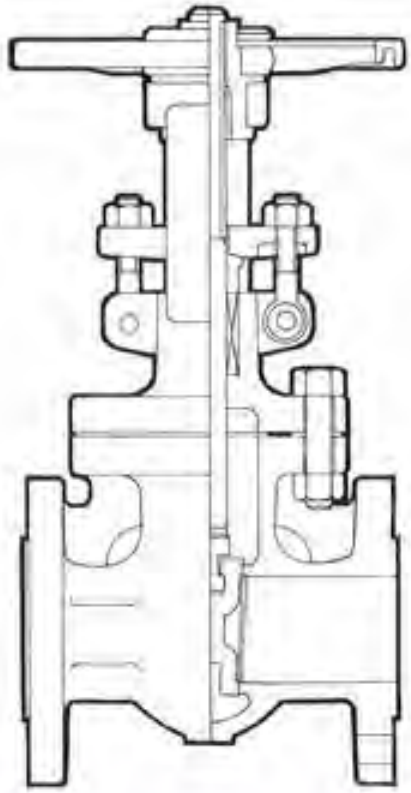

PART	MATERIAL	A.S.T.M
Handle Nut	Steel chrome plated	A47-32510+Cr
Set Screw	Steel	
Hand Wheel	Malleable Iron	A197
Yoke Sleeve	Austen. duct. iron	A439-D2C
Thrust Washer	Stainless Steel	A479-410
Stem	Stainless Steel	A479-316
Hinge Bolt	Stainless Steel	A479-F304
Hinge Nut	Stainless Steel	A194-6
Gland Flange	Stainless Steel	A351-CF8
Packing Gland	Stainless Steel	A479-316
Hinge Pin	Stainless Steel	A479-304
Packing	Teflon	
Bonnet Bolt	Stainless Steel	A193-B8
Bonnet Nut	Stainless Steel	A194-6
Gasket	Teflon	
Bonnet	Stainless Steel	A351-CF8M
Wedge	Stainless Steel	A351-CF8M
Body	Stainless Steel	A351-CF8M

DIMENSIONS

Nominal Size mm	15	20	25	40	50	65	80	100	150	200	250	300
A mm	108	117	127	165	178	191	203	229	267	292	330	356
B mm (open)	190	198	232	283	332	381	424	529	730	934	1114	1314
C mm	100	100	120	140	160	180	200	250	315	355	355	450
Approx Weight kg	2	3	5	9	13	18	22	34	57	97	132	197

ART "A" - GATE VALVE

Metal sealing with free disks (male/female disk) in the wedge of the gate.
Practically no maintenance is required for the special closing system (metal to metal), but a perfect airtight is not assured.
Pneumatic actuator, with reciprocating movement, is equipped with manual emergency knob.
The pneumatic gate valve can intercept liquid fluids and gases without solid suspensions (keep into account the closing system).
Standard: Connections with inner GAS ISO 228 female-female.
On request: NPT connections.
Control air 1/8" GAS connections.
OPERATING TEMPERATURE: from -20°C to +80°C.
ACTUATOR PILOT PRESSURE: Max 8 bar.
VERSIONS AND SIZES
GAS threaded connection
DA: 3/4" - 1" - 1"1/4 - 1"1/2 - 2" - 2"1/2 - 3" - 4"
SANC: 3/4" - 1" - 1"1/4 - 1"1/2 - 2" - 2"1/2 - 3"
SANO: 3/4" - 1" - 1"1/4 - 1"1/2 - 2"
NPT connection
DA: 3/4" - 1" - 1"1/4 - 1"1/2 - 2" - 3"
SANC: 3/4" - 1" - 1"1/4 - 1"1/2 - 2" - 3"
SANO: 3/4" - 1" - 1"1/4 - 1"1/2 - 2"
ANODIZING TREATMENT ON OUTSIDE DETAILS MADE IN ALUMINIUM

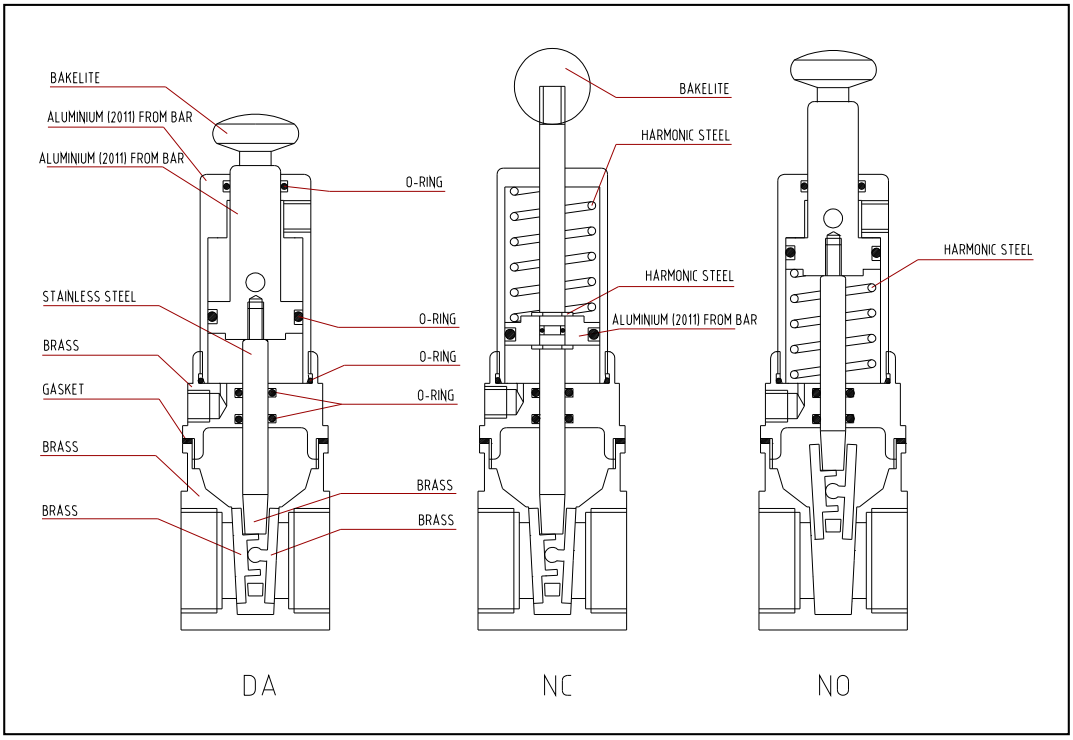

GL012

Globe valve, union bonnet, Steam.

Suitable for steam, water, air, gas and most chemicals

- **Body & bonnet: Bronze B62**
- **Disc & Seat: Stainless steel ASTM A276-410**
- **End Connections: Screwed BSP**
- **Maximum pressure rating: 2,100 kpa at 217 deg C, 4,100 kpa at -29 to +38 deg C**
- **Sizes: 15mm to 50mm**

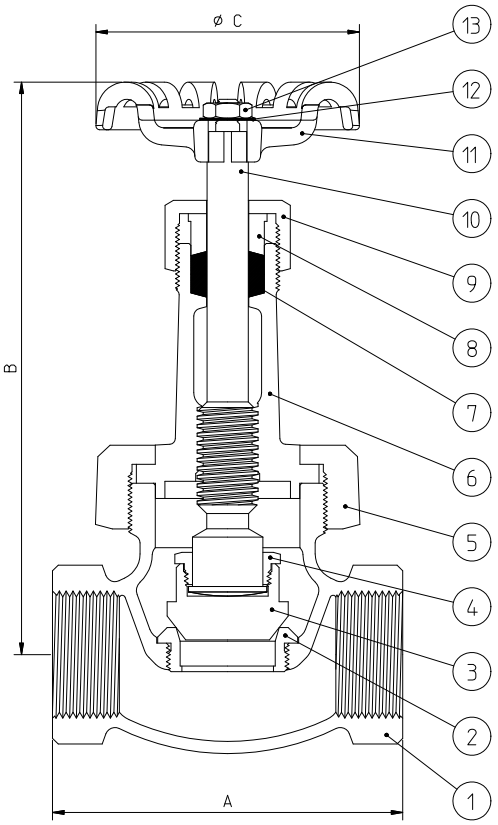

	1/2"	3/4"	1"	1 1/4"	1 1/2"	2"
A	75	90	106	122	135	165
B	145	162	175	206	232	261
øC	67	72	82	92	102	122

HIDROSTATIC TEST	
BODY	900 PSI (62 BAR)
SEAT	600 PSI (41 BAR)

WORKING CONDITIONS		
SATURATED STEAM	300 PSI (21 BAR)	NON SHOCK
WATER, OIL	600 PSI (41 BAR)	

MAXIMUM TEMPERATURE = 232 °C

POS.	QUANT.	DENOMINATION	MATERIAL	ABNT SPECIFICATION	ASTM SPECIFICATION
13	01	NUT	ST. STEEL	NBR5601/304	A276/304
12	01	IDENT. PLATE	ALUMINUM		
11	01	HANDWHEEL	ALUMINUM		B85/S12A
10	01	STEM	BRASS	NBR6188/C37700	B124/C37700
9	01	PACKING NUT	BRONZE	NBR6314/C83600	B62/C83600
8	01	GLAND	BRASS	NBR6188/C37700	B124/C37700
7	02	PACKING	PTFE		
6	01	BONNET	BRONZE	NBR6314/C83600	B62/C83600
5	01	UNION BONNET RING	BRONZE	NBR6314/C92200	B61/C92200
4	01	SUPPORT. WASHER	BRASS	NBR5023	B16/C36000
3	01	PLUG DISC	ST. STEEL	NBR5601/410	A276/410
2	01	SEAT	ST. STEEL	NBR5601/410	A276/410
1	01	BODY	BRONZE	NBR6314/C83600	B62/C83600

NOTE: THE DIMENSIONS ARE EXPRESSED IN MILLIMETERS.

GLBF8008N(S)

Globe valve, OS&Y, bolted bonnet, Class 800#.

Suitable for steam, water, air, gas and non corrosive chemicals

- **Body & bonnet: Forged Steel ASTM A105**
- **Disc: 13% Chrome stainless steel**
- **Seat: ASTM A276-410 + Stellite #6**
- **End Connections: Screwed NPT or socket weld**
- **Maximum pressure rating: 5,512 at 454 deg C, 13,780 kpa at -29 to +35 deg C**
- **Sizes: 15mm to 50mm**

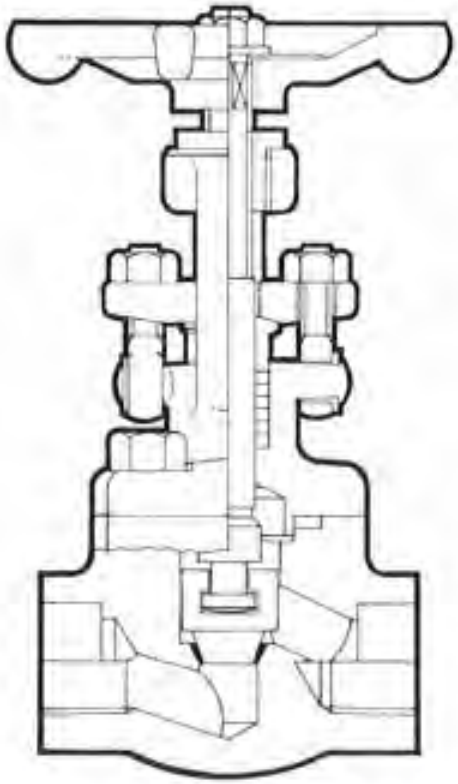

PART	MATERIAL	A.S.T.M.
Handwheel nut	Carbon steel	A563A
Handwheel washer	Carbon steel	A283 D
Name plate	Aluminium	
Hand wheel	Malleable iron	A197
Yoke bush	13Cr Stainless steel	A582-416
Eye bolt	13Cr Stainless steel	A276-410
Gland nut	Carbon steel	A194-2H
Gland flange	Forged steel	*A105
Gland	13Cr Stainless steel	A276-410
Retaining washer	Carbon steel	A283 D
Gland packing	Non-asbestos	
Bonnet bolt	Alloy steel	A193-B7
Bonnet	Forged steel	*A105
Gasket	304 Hoop-teflon	
Stem	13Cr Stainless steel	A276-410
Disc	13Cr Stainless steel	A217-CA15
Seat	Stellite #6/Equiv	
Body	Forged steel	*A105

*Carbon content 0.25% max

DIMENSIONS:

Nominal Size mm	6	10	15	20	25	40	50
A mm	76	76	76	86	102	152	172
B mm (open)	149	149	149	157	190	225	267
C mm	102	102	102	102	114	140	165
Approx Weight kg	1.6	1.8	1.8	2.1	2.9	6.2	9.7

GLBC1508R

Globe valve, OS&Y, bolted bonnet, Class 150#.

Suitable for steam, water, air, gas and non corrosive chemicals

- **Body & bonnet: Cast Steel ASTM A216 Gr WCB**
- **Disc: 13% Chrome stainless steel**
- **Seat: ASTM A105 + Stellite #6**
- **End Connections: Flanged ANSI 150**
- **Maximum pressure rating: 1,171 at 260 deg C, 1,964 kpa at -29 to +35 deg C**
- **Sizes: 50mm to 300mm**

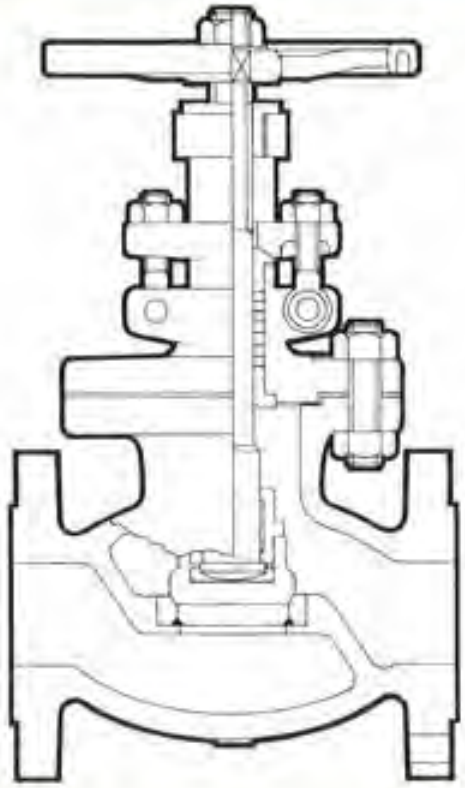

PART	MATERIAL	A.S.T.M.
Handwheel nut	Steel	A307B
Washer	Steel	
Handwheel	Malleable iron	A197
Yoke Bush	Austen. duct iron	A439 Type D2C
Spindle	13% chrome steel	A479-410
Gland Nut	Steel	A307B
Gland flange	Steel	A105
Gland eye bolt	Alloy steel	A307B
Gland follower	Steel chrome plated	A108 Gr 1020 + Cr
Gland hinge pin	Steel	A108 Gr 1020
Gland packing	JIC 3085	Non-Asbestos
Bonnet nut	Steel	A194 Gr 2H
Bonnet	Cast steel	*A216 Gr WCB
Bonnet stud	Alloy steel	A193 Gr B7
Gasket	Soft steel	
Back seat bush	13% chrome steel	A479-410
Disc ret. nut	13% chrome steel	A479-410
Disc	13% chrome steel	A217 CA15
Body seat ring	Stellite faced	A108 Gr 1020 + Sti
Body	Cast steel	*A216 Gr WCB

*Carbon content 0.25% max.

DIMENSIONS:

Nominal Size mm	50	65	80	100	150	200	250	300
A mm	203	216	241	292	406	495	622	699
B mm (open)	316	330	365	414	502	590	775	825
C mm	200	200	224	260	355	400	450	500
Approx. Weight kg	20	28	34	52	89	168	242	404

GLBC3008R

Globe valve, OS&Y, bolted bonnet, Class 300#.

Suitable for steam, water, air, gas and non corrosive chemicals

- **Body & bonnet: Cast Steel ASTM A216 Gr WCB**
- **Disc: 13% Chrome stainless steel**
- **Seat: ASTM A105 + Stellite #6**
- **End Connections: Flanged ANSI 300**
- **Maximum pressure rating: 1,860 at 454 deg C, 5,100 kpa at -29 to +35 deg C**
- **Sizes: 50mm to 300mm**

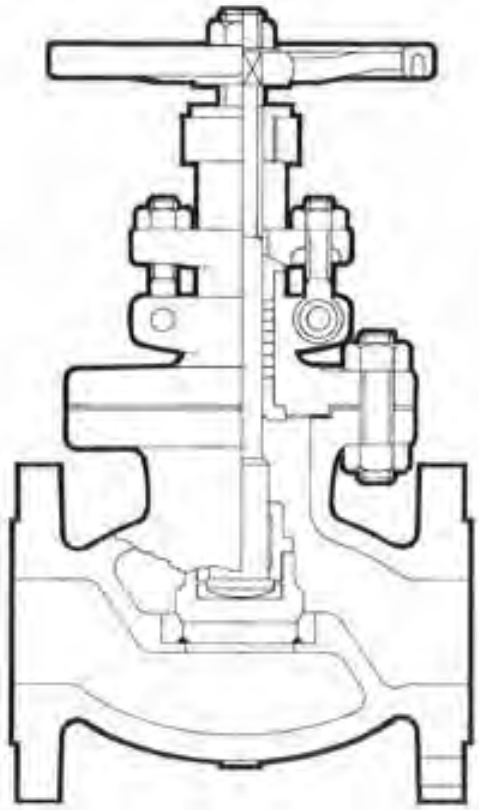

PART	MATERIAL	A.S.T.M.
Handwheel nut	Steel	A307B
Washer	Steel	
Handwheel	Malleable iron	A197
Yoke bush	Austen. duct iron	A439 Type D2C
Spindle	13% chrome steel	A479-410
Gland Nut	Steel	A307B
Gland flange	Steel	A105
Gland eye bolt	Alloy steel	A307B
Gland follower	Steel chrome plated	A108 Gr 1020 + Cr
Gland hinge pin	Steel	A108 Gr 1020
Gland packing	JIC 3085	Non-Asbestos
Lantern Ring	13% chrome steel	A479-410
Bonnet nut	Steel	A194 Gr 2H
Bonnet	Cast steel	*A216 Gr WCB
Bonnet stud	Alloy steel	A193 Gr B7
Gasket	Soft steel	
Back seat bush	13% chrome steel	A479-410
Disc ret. nut	13% chrome steel	A479-410
Disc	13% chrome steel	A217 CA15
Body seat ring	Stellite faced	A108 Gr 1020 + Stl
Body	Cast steel	*A216 Gr WCB

*Carbon content 0.25% max.

DIMENSIONS:

Nominal Size mm	50	65	80	100	150	200	250	300
A mm	267	292	318	356	445	559	622	711
B mm (open)	350	391	420	492	620	793	1145	1260
C mm	200	224	280	355	450	560	560	710
Approx Weight kg	26	40	53	80	168	248	456	608

GLBS8008N(S)

Globe valve, OS&Y, bolted bonnet, Class 800#.

Suitable for steam, water, air, gas and most chemicals

- **Body & bonnet: 316L Stainless steel**
- **Disc: 316L Stainless steel**
- **Seat: Stainless steel + Stellite #6**
- **End Connections: Screwed NPT or socket weld**
- **Maximum pressure rating: 5,930 at 454 deg C, 11,032 kpa at -29 to +35 deg C**
- **Sizes: 15mm to 50mm**

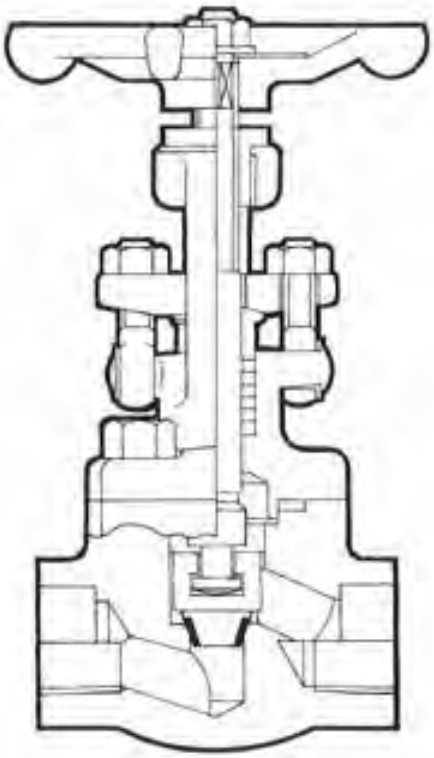

PART	MATERIAL	A.S.T.M.
Handwheel Nut	Carbon Steel	A563 A
Handwheel Washer	Carbon Steel	A283 D
Name Plate	Stainless Plate	
Hand Wheel	Malleable Iron	A197
Yoke Bush	13Cr Stainless Steel	A582-416
Eye Bolt	Stainless Steel	A276-304
Gland Nut	Stainless Steel	A194-8
Gland Flange	Stainless Steel	A182-F304
Gland	Stainless Steel	A276-304
Retaining Washer	Stainless Steel	A276-304
Gland Packing	Grafoil	
Bonnet Bolt	Stainless Steel	A193-B8
Bonnet	Stainless Steel	A182-F316L
Gasket	304 Hoop-Teflon	
Stem	Stainless Steel	A276-316
Disc	S/S + Stellite #6	A351-CF8M
Seat	Stainless Steel	A182-F316L
Body	Stainless Steel	A182-F316L

DIMENSIONS

Nominal Size mm	8	10	15	20	25	40	50
A mm	76	76	76	86	102	152	172
B mm (open)	149	149	149	157	190	225	267
C mm	102	102	102	102	114	140	165
Approx Weight kg	1.8	1.8	1.8	2.1	2.9	6.2	9.7

ART "DV" SHUTTER ANGLE VALVE FOR STEAM AND HIGH TEMPERATURE

Angle valve at 45° with flat shutter closing .
SEAL: PTFE.
Seal in PTFE **energized** with stainless steel spring on the stem.
Special gaskets for high temperature on the pneumatic side.
Perfect airtight. Long life even with high operating frequencies.
Pneumatic actuator with reciprocating piston movement.
It is equipped with a **NUT** which, turning the cylinder by 360°, allows the desired positioning of air side connection.
Connections with inner GAS ISO 228 thread female-female.
On request with NPT connections.
Control air 1/8" GAS connections.

ALLOWABLE TEMPERATURES
Operating temperature: from -20°C to +200°C
ACTUATOR PILOT PRESSURE. Max 8 bar.
For steam please refer to the Differential pressure and Satured Steam Charts.

VERSIONS AND SIZES
DA: 1/2" - 3/4" - 1"
SANC: 1/2" - 3/4" - 1" - 1"1/4 - 1"1/2 - 2" - 2"1/2 - 3"
SANO: 1/2" - 3/4" - 1"

ANODIZING TREATMENT ON OUTSIDE DETAILS MADE IN ALUMINIUM

It is **not subject** to the "Water Hammer" if the fluid pass through the valve in the direction of the arrow printed on the body (under the actuator).
With these conditions the tightness is guaranteed up to the pressures shown in the Differential Pressure Chart.

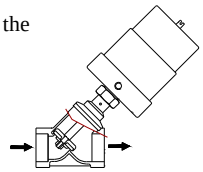

MINIMUM PRESSURE REQUIRED TO OPEN NC VERSION

G	1/2"	3/4"	1"	1"1/4	1"1/2	2"	2"1/2	3"
BAR	4	4	5	5	5	5	5	5

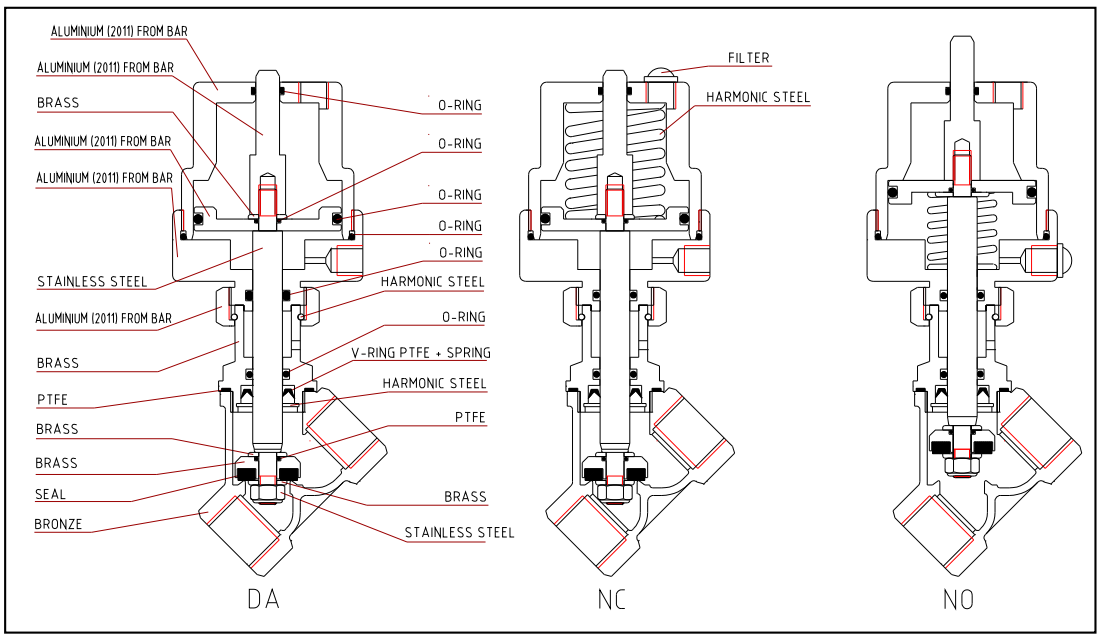

UW

Solenoid valve, light pattern, normally closed.

Suitable for water, air, gas and oil

- Body & bonnet: Brass
- Diaphragm & Disc: NBR
- Coil: DIN
- Available voltages: 240vAC, 110vAC and 24vDC
- End Connections: Screwed BSP
- Maximum pressure rating: 1,000 kpa cold up to 25mm, 500 kpa 32mm to 50mm
- Sizes: 15mm to 50mm

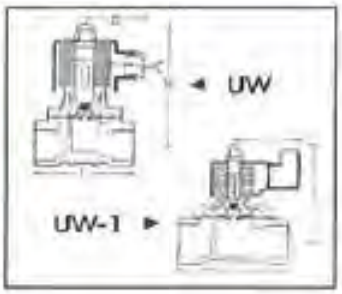

MATERAIL	
PARTS	MATERAIL
Body	Large Brass (Cast Bronze
Coil	Special Copper Wire (H)
Core	Stainless Steel
Tube	Stainless Steel
Spring	Stainless Steel
Plug	NBR,Viton,Silicon
Diaphragm	NBR,Viton,Silicon

DIN	MODEL	PIPE SIZE	Cv	ORIFICE	FLUID TEMP. C	MAX. OPERATING PRESSURE DIFF. KGF/CM²			DIMENSION(mm)			WEIGHT (kg)
						AIR	WATER	LIGHT OIL	L	H	D	
●	UW-10	3/8"	2.4	15 mm	-5C ~ 80C	0-7	0-5	0-5	70	100	50	0.9
●	UW-15	1/2"	4.5	15 mm	-5C ~ 80C	0-7	0-5	0-5	70	100	50	0.9
●	UW-20	3/4"	8.8	20 mm	-5C ~ 80C	0-7	0-5	0-5	70	112	50	1.0
●	UW-25	1"	12	25 mm	-5C ~ 80C	0-7	0-5	0-5	93	135	50	1.8
●	UW-35-1	1 1/4"	24	35 mm	-5C ~ 80C	0-7	0-5	0-5	125	140	58	3.2
●	UW-40-1	1 1/2"	28	40 mm	-5C ~ 80C	0-7	0-5	0-5	125	140	58	3.5
●	UW-50-1	2"	48	50 mm	-5C ~ 80C	0-7	0-5	0-5	167	170	58	5.4

SUS

Solenoid valve, stainless steel construction, heavy pattern.

Suitable for steam, water, air, gas and most chemicals

- Body & bonnet: 316 stainless steel
- Plug: PTFE
- Core needle, tube & Spring: Stainless steel
- Available voltages: 240vSC, 110vAC and 24vDC
- End Connections: Screwed BSP
- Maximum pressure rating: 1,500 kpa cold, 1,035 kpa steam

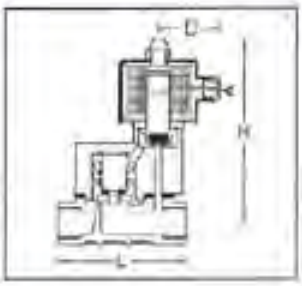

MATERAIL	
PARTS	MATERAIL
Body	CF8M
Coil	Special Copper Wire (H)
Core	Stainless Steel
Tube	Stainless Steel
Spring	Stainless Steel
Plug	PTFE
Bonnet/Nut	PTFE
Piston	316

DIN	MODEL	PIPE SIZE	Cv	ORIFICE	FLUID TEMP. C	MAX. OPERATING PRESSURE DIFF. KGF/CM²				DIMENSION(mm)			WEIGHT (kg)
						WATER	AIR	STEAM	LIGHT OIL	L	H	D	
●	SUS-12#316	1/2"	4.0	17 mm	-5C ~ 165C	0.5-10	0.5-10	0.5-10	0.5-10	82	125	45	1.4
●	SUS-20#316	3/4"	6.0	17 mm	-5C ~ 165C	0.5-10	0.5-10	0.5-10	0.5-10	82	120	45	1.5
●	SUS-25#316	1"	12	22 mm	-5C ~ 165C	0.5-10	0.5-10	0.5-10	0.5-10	100	134	45	1.8
●	SUS-35#316	1 1/4"	18	30 mm	-5C ~ 165C	0.5-10	0.5-10	0.5-10	0.5-10	125	158	45	2.8
●	SUS-40#316	1 1/2"	28	30 mm	-5C ~ 165C	0.5-10	0.5-10	0.5-10	0.5-10	125	148	45	2.9
●	SUS-50#316	2"	48	50 mm	-5C ~ 165C	0.5-10	0.5-10	0.5-10	0.5-10	168	175	45	5.6

US

Solenoid valve, heavy pattern, normally closed.

Suitable for steam, water, air, gas and most non corrosive chemicals

- Body & bonnet: Bronze
- Plug: PTFE + 15% GF
- Core needle, tube & Spring: Stainless steel
- Available voltages: 240vAC, 110vAC and 24vDC
- End Connections: Screwed BSP
- Maximum pressure rating: 1,500 kpa cold, 1,035 kpa steam
- Sizes: 15mm to 50mm

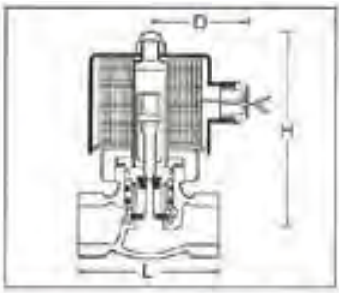

MATERAIL	
PARTS	MATERAIL
Body	Cast Bronze
Coil	Special Copper Wire (H)
Core Needle	Stainless Steel
Tube	Stainless Steel
Spring	Stainless Steel
Plug	PTFE + 15%GF
Bonnet/Nut	PTFE
Piston	Brass

DIN	MODEL	PIPE SIZE	Cv	ORIFICE	FLUID TEMP. C	MAX. OPERATING PRESSURE DIFF. KGF/CM²				DIMENSION(mm)			WEIGHT (kg)
						WATER	AIR	STEAM	HEAVY OIL	L	H	D	
	US-15	1/2"	4.0	17 mm	-5C ~ 165C	0.5-15	0.5-15	0.5-10	0.5-10	82	120	56	1.7
	US-20	3/4"	6.0	17 mm	-5C ~ 165C	0.5-15	0.5-15	0.5-10	0.5-10	82	128	56	1.7
	US-25	1"	12	22 mm	-5C ~ 165C	0.5-15	0.5-15	0.5-10	0.5-10	101	140	56	2.0
	US-35	1 1/4"	18	30 mm	-5C ~ 165C	1-10	1-15	1-10	1-10	119	144	56	3.1
	US-40	1 1/2"	28	30 mm	-5C ~ 165C	1-10	1-15	1-10	1-10	119	144	56	3.3
	US-50	2"	48	50 mm	-5C ~ 165C	1-10	1-15	1-10	1-10	163	173	56	7.2